MOUNTING AND OPERATING INSTRUCTIONS

EB 5573-1 EN

Translation of original instructions

TROVIS 5573-1 Heating and District Heating Controller
With graphics display

Firmware version 3.11.xx

Edition July 2026

Note on these mounting and operating instructions

These mounting and operating instructions (EB) assist you in mounting and operating the device safely. The instructions are binding for handling SAMSON devices. The images shown in this document are for illustration purposes only. The actual product may vary.

⇨ For the safe and proper use of these instructions, read them carefully and keep them for later reference.

⇨ If you have any additional questions not related to the contents of this document, contact SAMSON's After-sales Service (aftersalesservice@samsongroup.com).

Documents relating to the device, such as the mounting and operating instructions, are available on our website:
▶ https://www.samsongroup.com/en/downloads/documentation

Definition of signal words

⚠ DANGER

Hazardous situations which, if not avoided, will result in death or serious injury

⚠ WARNING

Hazardous situations which, if not avoided, could result in death or serious injury

NOTICE

Property damage message or malfunction

Note

Additional information

Tip

Recommended action

1 Safety instructions and measures ... 6
1.1 Notes on possible severe personal injury ... 7
1.2 Notes on possible property damage ... 7

2 Markings on the device ... 9
2.1 Nameplate ... 9
2.2 Device version ... 9
2.3 Firmware versions ... 10

3 Design and principle of operation ... 13
3.1 Configuration using the TROVIS-VIEW software ... 13
3.2 Connection to SAM DISTRICT ENERGY ... 13
3.3 Technical data ... 14
3.4 Dimensions ... 15
3.5 Values for resistance thermometers ... 16

4 Shipment and on-site transport ... 17
4.1 Accepting the delivered goods ... 17
4.2 Removing the packaging from the heating controller ... 17
4.3 Transporting the heating controller ... 17
4.4 Storing the heating controller ... 17

5 Installation ... 18
5.1 Installation conditions ... 18
5.2 Preparation for installation ... 18
5.3 Mounting the heating controller ... 18
5.4 Electrical connection ... 20

6 Operation ... 26
6.1 Operating controls ... 26
6.2 Interfaces ... 27
6.2.1 M-Bus interface ... 27
6.2.2 Optional interfaces ... 28
6.2.3 Accessories ... 28

7 Start-up and configuration ... 29
7.1 Changing the display contrast ... 30
7.2 Changing the display language ... 30
7.3 Setting the system code number ... 30
7.4 Activating and deactivating functions ... 31
7.5 Changing parameters ... 33
7.6 Calibrating sensors ... 33
7.6.1 Special values ... 35
7.7 Entering customized key number ... 35

8 Set-up ... 36
8.1 Selecting the operating mode ... 36
8.2 Schedules ... 38
8.2.1 Setting the time and date ... 38
8.2.2 Setting the times-of-use ... 39
8.2.3 Setting the party timer (special time-of-use) ... 41
8.2.4 Programming public holidays (special times-of-use) ... 42
8.2.5 Programming vacation periods (special times-of-use) ... 43
8.3 Entering day and night set points ... 44
8.4 Reset to default settings ... 45
8.5 Information readings ... 45
8.6 Adapting the Trend-Viewer ... 48

8.7 Operating the heating controller in manual mode....50

9 Malfunctions....51
9.1 Error list....52
9.2 Sensor failure....52
9.3 Temperature monitoring....53
9.4 Fault alarm output....53
9.5 Error status register....54

10 Servicing....55
10.1 Recommended inspection and testing....55
10.2 Firmware update....55
10.2.1 Update over RS-232 interface....55
10.2.2 Update over RS-485 bus....57
10.2.3 Update over Ethernet....59
10.2.4 Automatic update for several controllers over RS-485 bus or Ethernet....60

11 Decommissioning....62

12 Removal....63

13 Repair....64
13.1 Returning devices to SAMSON....64

14 Disposal....65

15 Certificates....66

16 Appendix A (configuration instructions)....68
16.1 Systems....68
16.2 Functions of the heating circuit....107
16.2.1 Outdoor-temperature-compensated control....107
16.2.1.1 Outdoor temperature received or sent as 0 to 10 V signal....108
16.2.1.2 Gradient characteristic....109
16.2.1.3 Four-point characteristic....110
16.2.2 Fixed set point control....112
16.2.3 Underfloor heating/drying of jointless floors....112
16.2.4 Night set-back....113
16.2.4.1 Outdoor temperature for continuous day mode....113
16.2.4.2 Variable night set-back....114
16.2.4.3 Smooth transition....114
16.2.4.4 Rapid heat-up....115
16.2.5 Buffer tank systems 16.x....115
16.2.6 Summer mode....118
16.2.7 Delayed outdoor temperature adaptation....118
16.2.8 Remote operation....119
16.2.9 Optimization....119
16.2.10 Flash adaptation....120
16.2.11 Flash adaptation without outdoor sensor (based on room temperature)....120
16.2.12 Adaptation....121
16.2.13 Cooling control....121
16.2.14 Differential temperature control....123
16.3 Functions of the DHW circuit....124
16.3.1 DHW heating in the storage tank system....124
16.3.1.1 DHW circuit additionally controlled by a globe valve....125
16.3.2 DHW heating in the storage tank charging system....126
16.3.2.1 Cold charging protection....128
16.3.3 DHW heating in instantaneous heating system....128

16.3.4 Domestic hot water with solar system....130
16.3.5 Intermediate heating....130
16.3.6 Parallel pump operation....130
16.3.7 Circulation pump during storage tank charging....132
16.3.8 Priority circuit....132
16.3.8.1 Reverse control....132
16.3.8.2 Set-back operation....132
16.3.8.3 Stand-by mode....133
16.3.9 Forced charging of DHW storage tank....133
16.3.10 Thermal disinfection of DHW storage tank....133
16.4 System-wide functions....135
16.4.1 Automatic summer/standard time switchover....135
16.4.2 Frost protection....135
16.4.3 Forced pump operation....135
16.4.4 Return temperature limitation....136
16.4.5 Condensate accumulation control....137
16.4.6 Three-step control....137
16.4.7 On/off control....137
16.4.8 Continuous control....138
16.4.9 Releasing a control circuit/heating controller with binary input....138
16.4.10 Speed control of the charging pump....139
16.4.11 Processing an external demand....139
16.4.12 External demand using a 0 to 10 V signal....141
16.4.13 Power limitation in RK1....141
16.4.14 Creep feed rate limitation with a binary input....142
16.4.15 Connecting potentiometers for valve position input....142
16.4.16 Locking manual level....142
16.4.17 Locking the rotary switch....142
16.4.18 Feeder pump operation....143
16.4.19 On/off cycle mode of the circulation pump (ZP)....143
16.4.20 External demand for heat due to insufficient heat supply....143
16.5 Communication....144
16.5.1 RS-485 communication module....144
16.5.2 Meter bus....145
16.5.2.1 Activating the meter bus....145
16.5.2.2 Flow rate and/or power limitation with meter bus....146
16.5.3 Memory module/mini module....148
16.5.4 Data logging....150
16.6 Function block lists....151
16.7 Parameter lists....162
16.8 Customer-specific data....165

17 Appendix B....174
17.1 Accessories....174
17.2 After-sales service....175

1 Safety instructions and measures

Intended use

The TROVIS 5573-1 Heating and District Heating Controller is used to control up to two control circuits:

- Control of a primary heat exchanger or boiler with one mixing heating circuit and one non-mixing heating circuit (both outdoor-temperature-compensated) and control of DHW heating in the secondary circuit
- Outdoor-temperature-compensated buffer tank control with solid fuel boiler and solar circuit control
- Outdoor-temperature-compensated buffer tank control with up to two mixing heating circuits and continuous-flow hot water module
- Control of one outdoor-temperature-compensated heating circuit and a DHW heating with two valves in the primary circuit
- Control of two outdoor-temperature-compensated heating circuits with two valves in the primary circuit

The TROVIS 5573-1 Heating and District Heating Controller is designed to operate under exactly defined conditions. Therefore, operators must ensure that the heating controller is only used in operating conditions that meet the specifications used at the ordering stage. In case operators intend to use the heating and district heating controller in applications or conditions other than those specified, contact SAMSON.

SAMSON does not assume any liability for damage resulting from the failure to use the device for its intended purpose or for damage caused by external forces or any other external factors.

⇨ Refer to the technical data for limits and fields of application as well as possible uses (see Chapter 3.3).

Reasonably foreseeable misuse

The product (TROVIS 5573-1) is not suitable for the following applications:

- Use outside the limits defined during sizing and by the technical data

Furthermore, the following activities do not comply with the intended use:

- Use of non-original spare parts
- Performing service and repair work not described

Qualifications of operating personnel

The product (TROVIS 5573-1) must be mounted, started up, serviced and repaired by fully trained and qualified personnel only; the accepted industry codes and practices must be observed. According to the mounting and operating instructions, trained personnel refers to individuals who are able to judge the work they are assigned to and recognize possible hazards due to their specialized training, their knowledge and experience as well as their knowledge of the applicable standards.

Personal protective equipment

No personal protective equipment is required for the direct handling of the product (TROVIS 5573-1).

Revisions and other modifications

Revisions, conversions or other modifications of the product (TROVIS 5573-1) are not authorized by SAMSON. They are performed at the user's own risk and may lead to safety hazards, for example. Furthermore, the product may no longer meet the requirements for its intended use.

Warning against residual hazards

The heating controller has direct influence on controlled components of the heating system (e.g. control valves and pumps). To avoid personal injury or property damage, plant operators and operating personnel must prevent hazards that could be caused in the plant components by the process medium, the operating pressure, the signal pressure or by moving parts by taking appropriate precautions. Plant operators and operating personnel must observe all hazard statements, warnings and caution notes in the referenced documents.

Responsibilities of the operator

Operators are responsible for proper use and compliance with the safety regulations. Operators are obliged to provide these mounting and operating instructions to the operating personnel and to instruct them in proper operation. Furthermore, operators must ensure that operating personnel or third parties are not exposed to any danger.

The operator must ensure that the heating controller is always operated with the latest firmware version.

⇨ Update the heating controller on a regular basis.

⇨ Download the currently valid firmware at:
▶ www.samsongroup.com > DOWNLOADS > Software & Drivers > Firmware

Responsibilities of operating personnel

Operating personnel must read and understand these mounting and operating instructions as well as the specified hazard statements, warnings and caution notes. Furthermore, operating personnel must be familiar with the applicable health, safety and accident prevention regulations and comply with them.

Referenced standards, directives and regulations

The product (TROVIS 5573-1) with a CE marking fulfills the requirements of the following Directives:

- RoHS Directive 2011/65/EU
- EMC Directive 2014/30/EU
- Low-voltage Directive 2014/35/EU

The declarations of conformity and certificates are included in Chapter 15.

The product (TROVIS 5573-1) with a CE marking is designed for use in low voltage installations.

⇨ For wiring, maintenance and repair, observe the relevant safety regulations.

1.1 Notes on possible severe personal injury

⚠ DANGER

Risk of fatal injury due to electric shock.

⇨ Before connecting wiring, performing any work on the device or opening the device, disconnect the supply voltage and protect it against unintentional reconnection.

⇨ Only use protective equipment that can be protected against unintentional reconnection of the power supply.

⇨ Do not remove any covers to perform adjustment work on live parts.

1.2 Notes on possible property damage

NOTICE

Risk of damage to the heating controller due to the supply voltage exceeding the permissible tolerances.

The heating controller is designed for use in low voltage installations.

⇨ Observe the permissible tolerances of the supply voltage.

NOTICE

Malfunction due to a configuration that does not meet the requirements of the application.

The heating controller is configured for specific applications by setting functions and parameters. Function and parameter settings have a direct effect on final control elements.

⇨ Perform the configuration for the specific application.

NOTICE

Manipulation of the configuration due to unauthorized access.

The heating controller can be protected against unauthorized access through entering a key number. The key number for first start-up can be found at the back of these mounting and operating instructions.

⇨ Do not pass the key number on to unauthorized persons. Keep it in a safe place inaccessible to unauthorized persons.

NOTICE

Risk of heating controller damage due to large differences in temperature.

⇨ Before start-up, wait until the heating controller has reached the ambient temperature.

NOTICE

System damage caused by frost.

Frost protection is deactivated in the manual mode.

⇨ Do not run the heating during cold weather in the manual mode for long periods of time.

2 Markings on the device

2.1 Nameplate

The nameplate shown was up to date at the time of publication of this document. The nameplate on the device may differ from the one shown.

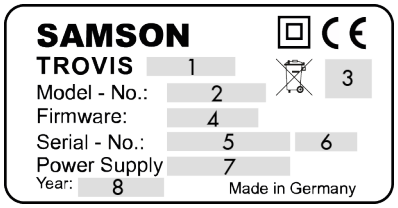

1 Type designation
2 Model number
3 Other mark of conformity
4 Firmware version
5 Serial number
6 Fuse protection
7 Supply voltage
8 Date of manufacture

2.2 Device version

The TROVIS 5573-1 Heating and District Heating Controller is available in various versions. The type designation on the nameplate indicates the heating controller version:

Type designation (nameplate)	Version
TROVIS 5573-100x	Heating and district heating controller with plain-text readings on a graphics display
TROVIS 5573-110x	Heating and district heating controller with graphics display and M-bus interface for three M-bus units

These mounting and operating instructions are valid for both controller versions.

2.3 Firmware versions

Firmware revisions	
Old	**New**
2.20	**2.24**
	Internal revisions
2.24	**2.26**
	New **error message** function (CO5 → F07)
	AT with 0-10 V function (CO5 → F23) extended Outdoor temperatures can be received or sent using a 0 to 10 V signal.
2.26	**2.28**
	New system 11.5 (see Chapter 16).
	Alarm and event lists each with the last 100 entries
2.28	**2.30**
	It is possible to connect PTC and Ni1000 sensors (Pt1000 sensors could only be connected in previous firmware versions)
2.30	**2.41**
	Connected sensor inputs not relevant to closed-loop control are displayed on the 'Special values' screen in the controller's operating level (see Chapter 7)
	New functions and parameters for buffer tank systems (see Chapter 16). – CO1 → F22: SLP depending on return temperature – CO5 → F25: AA1 reverse – CO5 → F31: Zero shift – PA1 → P16: Minimum set point to charge buffer tank – PA1 → P17: Stop charging of the buffer tank – PA1 → P18: Charging temperature boost – PA1 → P19: Lag time of charging pump
	New **differential temperature control** function (CO1 → F23) in systems 1.0 and 16.0 (see Chapter 16).
	TROVIS 5570 Room Panel no longer available.
	Restrictions when a mini module (order no. 1400-7436) is used (see Chapter 16).
2.41	**2.45**
	An active **cold charging protection** function allows the valve position to be determined between 1 and 100 % (default 10 %).
2.45	**2.48**
	Internal revisions

Firmware revisions	
Old	**New**
2.48	**2.51**
	Operating status reading of DHW circuit in the operating level
	Only the values that are not assigned to a partial system scheme are shown in the overall system scheme: This now also includes the demand to be processed.
	Meaning of CO1, CO2 → F02 changed: F02 - 1 = Outdoor-temperature-compensated control active
	Buffer tank systems: The measured value SF1 is now also relevant to end charging
	Discharging protection for DHW storage tank and buffer tank
	Separate boost adjustable for underfloor heating circuits
	No restart, instead the drying of jointless floors continues after a power supply failure
	Heating circuits can be configured to be circuits only processing demand with the settings CO1' → F24 - 1 and CO2' → F24 - 1
	Transmission range setting for 0 to 10 V signal to process external demand changed to CO5 → F31
	Default setting of heating characteristic 1.2 (0.5 for underfloor heating)
	Default setting of the maximum flow temperature: 70 °C
	Delayed outdoor temperature adaptation adjustable in steps of 0.1 °C
	TROVIS 5573-11 only: Return temperature limitation can be configured based on power
	Default setting of heat meter mode: 'Cont.'
2.51	**2.60**
	New **variable night set-back** function can be configured separately for each heating circuit (setting: CO1, CO2 → F28 - 1)
	Function blocks CO1 → F27 and CO4 → F27 added to activate the discharging protection
	Storage tank bottom sensor RüF2 can be configured as a sensor to switch off the thermal disinfection (setting: CO4 → F24 - 1)
	Free assignment of analog output: The CO5 → F34 setting is used to determine which output signals are to be issued at the 0 to 10 V output.
	The value of the 0 to 10 V output is set to 0 to 100 % in the 'AA1' option in the overall system scheme.
	Manual mode: The 0 to 10 V output is always available when 'AA1' is selected.
2.60	**2.61**
	Internal revisions
	Parameter names changed
2.61	**2.62**
	Internal revisions
2.62	**2.63**
	New option configurable: 3 V supply for analog outputs
2.63	**3.00.xx**
	Harmonization of versions
3.00.xx	**3.05.xx**
	Integration of vortex flow sensors over analog input AE1 (external supply voltage required to power sensors)
	ZP on/off cycle mode
	Adjustable limit for external demand (0 to 10 V)
	Sensor correction setting for 0 to 10 V input signal in CO5 → F20
	Internal optimization

Firmware revisions	
Old	**New**
3.05.xx	**3.06.xx** **(does not run on TROVIS 5573-11)**
	Remote start of drying of jointless floors over Modbus register
	Display all active and resolved error messages in the alarm log
	Internal optimization
3.06.xx	**3.08.xx (not TROVIS 5573-11)**
	New **Rapid heat-up** function for HC1 and HC2
	New **Smooth transition function** upon operating mode change (day-night, night-day)
	Internal optimization
3.08.xx	**3.09.xx (not TROVIS 5573-11)**
	DHW priority function through stand-by mode
	External release for DHW circuit
3.09.xx	**3.10.xx**
	Setting option added for the expected rate of hot water that will actually be tapped when vortex flow sensors are used
	'Maximum speed' parameter (in %) has been added to the SLP speed control (CO1/CO4 → F21)
	Internal optimization
3.10.xx	**3.11.xx**
	Internal optimization

NOTICE

Mandatory update for digital products and software.

The firmware is being constantly developed further. In some cases, an older firmware version than that described in this chapter may be installed in a heating controller in the delivered state.

⇨ *Update the heating controller on a regular basis.*

⇨ *Download the currently valid firmware at ▶ www.samsongroup.com > DOWNLOADS > Software & Drivers > Firmware and install it.*

Tip

The SAMSON NE53 newsletter keeps users up to date on any software or hardware revisions in accordance with NAMUR Recommendation NE 53. You can subscribe to the newsletter at ▶ www.samsongroup.com > SERVICE > NE53 newsletter.

3 Design and principle of operation

The TROVIS 5573-1 Heating and District Heating Controller is used to control up to two control circuits.

- Control of a primary heat exchanger or boiler with one mixing heating circuit and one non-mixing heating circuit (both outdoor-temperature-compensated) and control of DHW heating in the secondary circuit
- Outdoor-temperature-compensated buffer tank control with solid fuel boiler and solar circuit control
- Control of one outdoor-temperature-compensated heating circuit and a DHW heating with two valves in the primary circuit
- Control of two outdoor-temperature-compensated heating circuits with two valves in the primary circuit

The heating controller is adapted to the specific system by setting the appropriate system code number. Additional sensors and/or functions which are not part of the system's basic configuration can be selected in the function blocks. The switch positions ⇨ and entry of the key number allow access to the corresponding levels. For trained personnel, the configuration levels used to set function blocks are indicated by 'CO' and the parameter levels are indicated by 'PA'. Data is retrieved and entered at the heating controller using a rotary pushbutton.

Data input is facilitated by icons and plain text displayed on the LCD.

The rotary switch is used to set the operating mode and the key parameters required for individual circuits.

M-Bus interface

(TROVIS 5573-110x only)

A maximum of three meters conforming to EN 13757 can be connected for data transfer. In addition, heat meters are available for flow rate and/or capacity limitation for each control circuit. Various limits can be adjusted for the following operating modes in control circuit RK1:

- Heating control only
- Heating control together with DHW heating
- DHW heating only

Outdoor-temperature-compensated flow rate or power limitation can also be implemented.

3.1 Configuration using the TROVIS-VIEW software

The heating controller can be configured with the TROVIS-VIEW software.

In this case, the TROVIS 5573-1 Heating and District Heating Controller is connected to the computer at the RJ-45 port on the side of the controller.

The TROVIS-VIEW software enables the user to easily configure the heating controller as well as view process parameters online.

Note

TROVIS-VIEW can be downloaded free of charge from the SAMSON website at ▶ www.samsongroup.com > DOWNLOADS > Software & Drivers > TROVIS-VIEW Further information on TROVIS-VIEW (e.g. system requirements) is available on our website and in the Data Sheet ▶ T 6661 as well as in the Operating Instructions ▶ EB 6661.

3.2 Connection to SAM DISTRICT ENERGY

The heating controller can be configured and operated on a computer, smartphone or tablet computer using the SAM DISTRICT ENERGY industry-specific application.

The heating controller is connected to SAM DISTRICT ENERGY over the Modbus interface using a communication gateway.

SAM DISTRICT ENERGY allows the remote start-up and set-up of the heating controllers. Key information of the heating controller and entire heating system is clearly visualized at one central location.

Note

SAM DISTRICT ENERGY is a web-based solution for managing, controlling and optimizing heating systems in the local heat supply and district heating networks. You can find more information and test SAM DISTRICT ENERGY using a demo account on our website at ▶ www.samsongroup.com > PRODUCTS > Digital solutions > SAM DISTRICT ENERGY .

3.3 Technical data

Table 1: *Technical data*

TROVIS 5573-1		
Inputs		8x inputs for Pt1000, PTC or Ni1000 temperature sensors and 2x binary inputs Terminal 11 as 0 to 10 V input (e.g. for external demand or outdoor temperature signal)
Outputs [1]		2x three-step signal: rating max. 250 V AC, 2 A, alternatively 2x on/off signal: rating max. 250 V AC, 2 A 3x pump output: rating max. 250 V AC, 2 A; All outputs are relay outputs with varistor suppression Terminal 11 as 0 to 10 V output (e.g. for continuous closed loop control, outdoor temperature, signal for external demand or pump speed control) Load >5 kΩ
Interfaces (TROVIS 5573-110x only)		M-Bus interface (mini master) for up to three M-Bus units, protocol according to EN 13757 (formerly EN 1434-3)
Optional interfaces		1x Modbus RS-485 interface for two-wire bus using RS-485 communication module (Modbus RTU protocol, data format 8N1, RJ-45 port at the side)
Supply voltage		85 to 250 V
Power line frequency		48 to 62 Hz
Power consumption		Max. 6 VA, typical: 2.5 VA
Permissible ambient temperature range		
	Operation	0 to 55 °C
	Transportation and storage	-10 to +60 °C
Degree of protection		IP40 according to EN 60529
Class of protection		II according to EN 61140
Degree of contamination		2 according to EN 61010-1
Overvoltage category		II according to EN 60664-1
Noise immunity		According to EN 61000-6-1
Noise emission		According to EN 61000-6-3
Conformity		CE
Weight		Approx. 0.5 kg

[1] For systems with one control circuit, a maximum of four pumps are available.

3.4 Dimensions

Panel cut-out: 138 x 92

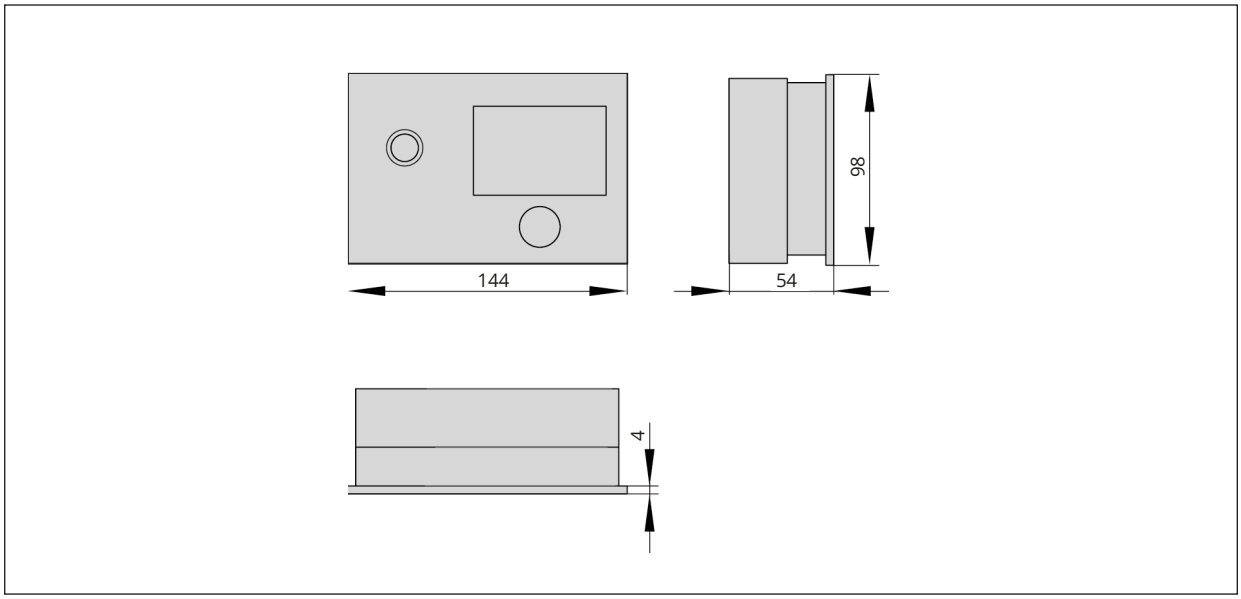

Fig. 1: *Dimensions in mm · Heating and district heating controller with standard base*

Panel cut-out: 138 x 92

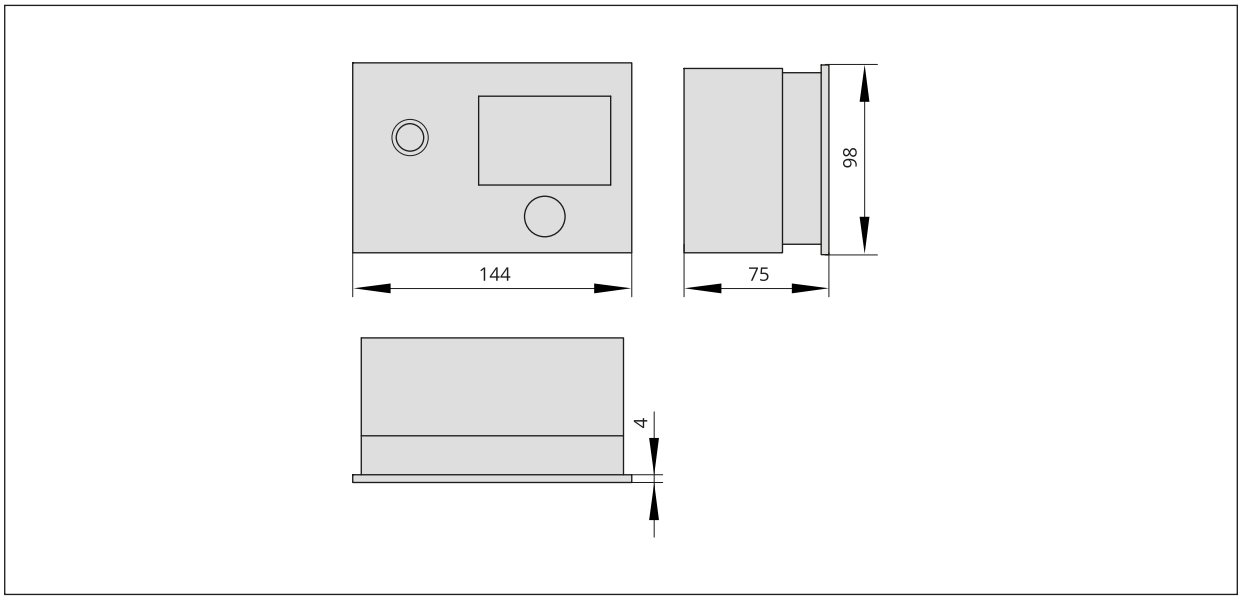

Fig. 2: *Dimensions in mm · Heating and district heating controller with high housing base*

3.5 Values for resistance thermometers

Pt1000 sensors

Temperature in °C	-100	-90	-80	-70	-60	-50	-40	-35	-30	-25	-20
Resistance in Ω	602.6	643.0	683.3	723.3	763.3	803.1	842.7	862.5	882.2	901.9	921.6
Temperature in °C	-15	-10	-5	0	+5	+10	+15	+20	+25	+30	+35
Resistance in Ω	941.2	960.9	980.4	1000.0	1019.5	1039.0	1058.5	1077.9	1097.3	1116.7	1136.1
Temperature in °C	+40	+45	+50	+55	+60	+65	+70	+75	+80	+85	+90
Resistance in Ω	1155.4	1174.7	1194.0	1213.2	1232.4	1251.6	1270.8	1289.9	1309.0	1328.1	1347.1
Temperature in °C	+95	+100	+105	+110	+115	+120	+125	+130	+135	+140	+145
Resistance in Ω	1366.1	1385.1	1404.0	1422.9	1441.8	1460.7	1479.5	1498.3	1517.1	1535.8	1554.6
Temperature in °C	+150	+155	+160	+165	+170	+175	+180	+185	+190	+195	+200
Resistance in Ω	1573.3	1591.9	1610.5	1629.1	1647.7	1666.3	1684.8	1703.3	1721.7	1740.2	1758.6

PTC sensors

Temperature in °C	–20	–10	0	+10	+20	+30	+40	+50
Resistance in Ω	693	756	824	896	971	1050	1133	1220
Temperature in °C	+60	+70	+80	+90	+100	+110	+120	
Resistance in Ω	1311	1406	1505	1606	1713	1819	1925	

Type 5244 Remote Control Unit

Switch position ◷, terminals 1 and 2

Temperature in °C	10	15	20	25	30
Resistance in Ω	679	699	720	741	762

Ni1000 sensors

Temperature in °C	–60	–50	–40	–30	–20	–10	0	+10	+20	+30	+40
Resistance in Ω	695	743	791	841	893	946	1000	1056	1112	1171	1230
Temperature in °C	+50	+60	+70	+80	+90	+100	+110	+120	+130	+140	+150
Resistance in Ω	1291	1353	1417	1483	1549	1618	1688	1760	1833	1909	1986
Temperature in °C	+160	+170	+180	+190	+200	+210	+220	+230	+240	+250	
Resistance in Ω	2066	2148	2232	2318	2407	2498	2592	2689	2789	2892	

4 Shipment and on-site transport

The work described in this chapter is to be performed only by personnel appropriately qualified to carry out such tasks.

4.1 Accepting the delivered goods

After receiving the shipment, proceed as follows:

1. Compare the shipment received with the delivery note.
2. Check the shipment for transportation damage. Report any damage to SAMSON and the forwarding agent (refer to delivery note).

4.2 Removing the packaging from the heating controller

Note

Do not remove the packaging until immediately before mounting and start-up.

1. Remove the packaging from the heating controller.
2. Check scope of delivery (see Table 2).
3. Dispose and recycle the packaging in accordance with the local regulations.

Table 2: *Scope of delivery*

1x TROVIS 5573-1 Heating and District Heating Controller
1x Document IP 5573-1 EN (Important Product Information)

4.3 Transporting the heating controller

Transport instructions

- Protect the heating controller against external influences (e.g. impact).
- Protect the heating controller against moisture and dirt.
- Observe transport temperature depending on the permissible ambient temperature (see Chapter 3).

4.4 Storing the heating controller

NOTICE

Risk of heating controller damage due to improper storage.

⇨ *Observe the storage instructions.*

⇨ *Avoid longer storage periods.*

⇨ *Contact SAMSON in case of different storage conditions.*

Note

SAMSON recommends to regularly check the prevailing storage conditions during long storage periods.

Storage instructions

- Protect the heating controller against external influences (e.g. impact).
- Protect the heating controller against moisture and dirt. Store it at a relative humidity of less than 75 %. In damp spaces, prevent condensation. If necessary, use a drying agent or heating.
- Make sure that the ambient air is free of acids or other corrosive media.
- Observe transport temperature depending on the permissible ambient temperature range (see Chapter 3).
- Do not place any objects on the heating controller.

5 Installation

The work described in this chapter is to be performed only by personnel appropriately qualified to carry out such tasks.

5.1 Installation conditions

Work position

The work position is the front view onto the operating controls on the heating controller seen from the position of operating personnel.

Operators must ensure that, after installation of the heating controller, the operating personnel can perform all necessary work safely and easily access the heating controller from the work position.

5.2 Preparation for installation

Before mounting, make sure that the following conditions are met:

– The heating controller is not damaged.

Proceed as follows:

⇨ Lay out the necessary material and tools to have them ready during mounting.

5.3 Mounting the heating controller

The heating controller consists of the housing with the electronics and the base with the terminals. It is suitable for panel, wall and rail mounting.

⇨ See Fig. 3.

Panel mounting

1. Undo the two screws (1).
2. Pull apart the controller housing and the base.
3. Make panel cut-out with the dimensions 138x92 mm (WxH).
4. Push the controller housing through the panel cut-out.
5. Tighten the two screws (2) to clamp the controller housing against the control panel.
6. Perform the electric wiring on the base as described in Chapter 5.4.
7. Remount the controller housing.
8. Tighten the two screws (1).

Wall mounting

1. Undo the two screws (1).
2. Pull apart the controller housing and the base.
3. If necessary, drill holes with the specified dimensions in the appropriate places. Fasten the base with four screws.
4. Perform the electric wiring on the base as described in Chapter 5.4.
5. Remount the controller housing.
6. Tighten the two screws (1).

Rail mounting

1. Fasten the spring-loaded hook (4) at the bottom of the top hat rail (3).
2. Slightly push the controller upwards and pull the top hook (5) over the top hat rail. Undo the two screws (1).
3. Pull apart the controller housing and the base.
4. Perform the electric wiring on the base as described in Chapter 5.4.
5. Remount the controller housing.
6. Tighten the two screws (1).

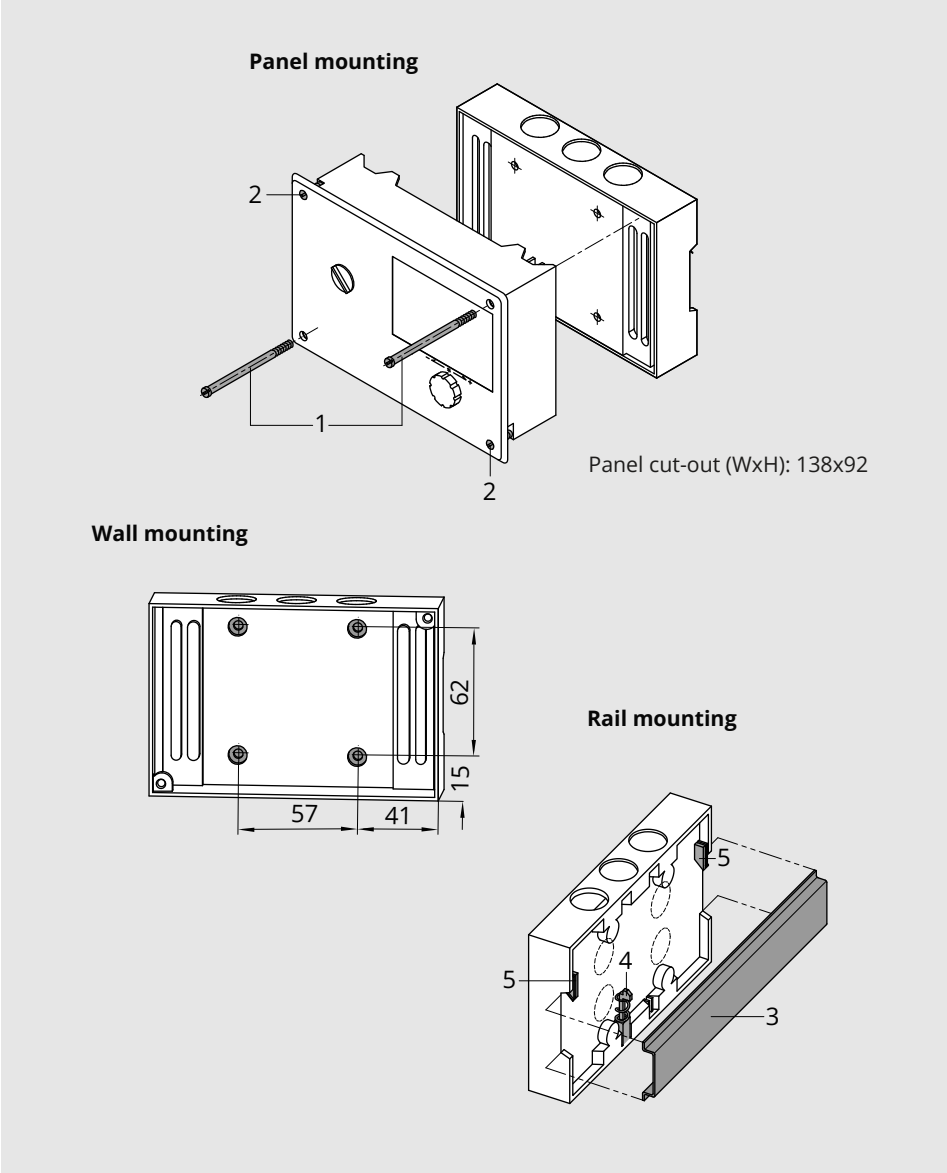

Fig. 3: *Mounting · Dimensions in mm*

5.4 Electrical connection

⚠ DANGER

Risk of fatal injury due to electric shock.

For wiring and connecting the heating controller, observe the relevant electrotechnical regulations of the country of use as well as the technical connection requirements of your local distribution system operator. Therefore, such work must be performed by properly trained and experienced personnel.

The terminals 20, 22, 25 and 28 allow the integration of safety equipment which have a direct influence on individual electric actuators and pumps. If this is not the case, connect a jumper from terminal 18 to terminals 20, 22, 25 and 28.

- ⇨ *Do not connect ELV cables (according to DIN VDE 0100) to these terminals.*
- ⇨ *Before performing any work on the terminals, disconnect the voltage supply from the heating controller.*
- ⇨ *Protect it against unintentional reconnection.*

Notes on electric wiring

- ⇨ Install the 230 V power supply lines and the signal lines separately and with sufficient space between them.
- ⇨ To increase immunity, keep a minimum distance of 10 cm between the lines. Make sure the minimum distance is also kept when the lines are installed in a cabinet.
- ⇨ Install the lines for digital signals (bus lines) and analog signals (sensor lines, analog outputs) separately and with sufficient space between them.
- ⇨ In systems with a high electromagnetic noise level, use shielded cables for the analog signals.
- ⇨ Ground the shield at one side, either at the control cabinet inlet or outlet, using the largest possible cross-section. Connect the central grounding point and the PE grounding conductor with a cable with at least 10 mm² wire cross-section using the shortest route.
- ⇨ Inductances in the control cabinet (e.g. contactor coils) must be equipped with suitable interference suppressors (RC elements).
- ⇨ Shield control cabinet elements with high field strength (e.g. transformers or frequency converters) with separators providing a good connection to the PE grounding conductor.
- ⇨ Use wires with wire cross-section as listed in Table 3 for the terminals.

Overvoltage protection

- ⇨ If signal lines are installed outside buildings or over large distances, make sure appropriate surge or overvoltage protection measures are taken. Such measures are indispensable for bus lines.
- ⇨ The shield of signal lines installed outside buildings must have current conducting capacity and must be grounded on both sides.
- ⇨ Install surge diverters at the entry of the control cabinet.

Connecting the heating controller

- ⇨ If the controller housing and the base have not yet been separated, undo the screws on the bottom left and top right of the front housing. Pull the controller off the base to connect the wiring.
- ⇨ To feed through cables, make holes in the marked locations at the top, bottom or back of the base of the housing and fit suitable grommets or cable glands.
- ⇨ For wall mounting: Ensure that the cables are not subject to torsion or bending by taking suitable precautions (e.g. use cable ducts) before inserting them into the base.

Connecting sensors

The wire cross-section of the sensor cables must not be smaller than 0.5 mm².

Wiring of a room panel

- ⇨ Connect as shown in Fig. 6 and Fig. 7.

Connecting the water flow sensor

- ⇨ Connect as shown in Fig. 9.

Connecting electric actuators

- ⇨ 0 to 10 V output: Use cables with a minimum wire cross-section of 0.5 mm².
- ⇨ Three-step or on/off outputs: Connect cables with a minimum wire cross-section of 1.5 mm² suitable for damp locations to the terminals of the controller output. We recommend checking the operating direction on start-up.

Connecting pumps

⇨ Connect all cables with at least a 1.5 mm^2 wire cross-section to the terminals of the heating controller as illustrated in the wiring diagram.

Note

The electric actuators and pumps are not automatically supplied with a voltage by the heating controller.

They can be connected over terminals 20, 22, 25 and 28 to an external voltage supply. For an internal power supply, place a jumper from terminal 18 to terminals 20, 22, 25 and 28.

DANGER

Risk of fatal injury as a result of failing to observe the permissible touch voltage.

Separation of the circuits is absolutely essential when SELV equipment is connected to terminals 20, 22, 25 and 28 as this equipment has a different intended use of the supply voltage than specified in the technical data (230 V AC).
The creepage and clearance present in the base and heating controller do not guarantee the required dielectric strength and the safe separation of the 230 V supply voltage and the other circuits.

⇨ *Take appropriate safety precautions (e.g. by using coupling relays for the control of electric actuators operated with 24 V or for ELV fault signaling contacts).*

⇨ *Only connect 230 V equipment.*

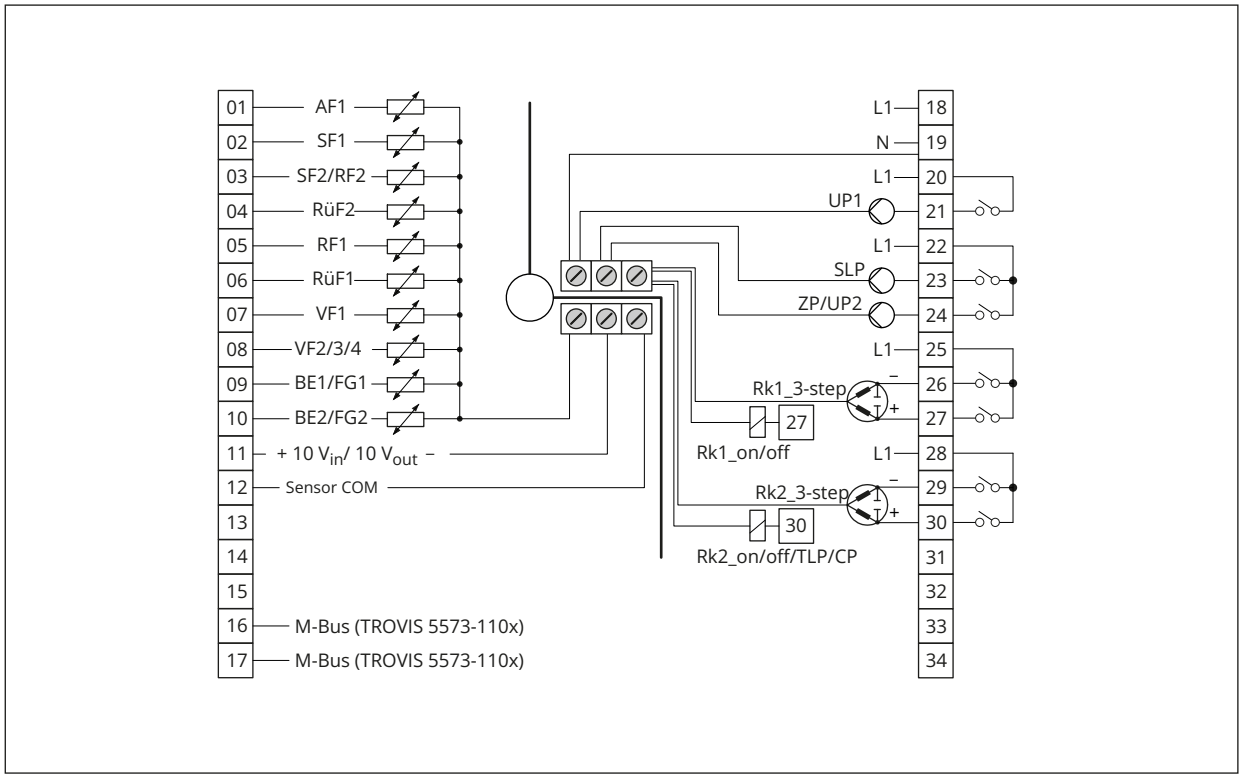

Fig. 4: *Wiring of TROVIS 5573 Controller with standard base*

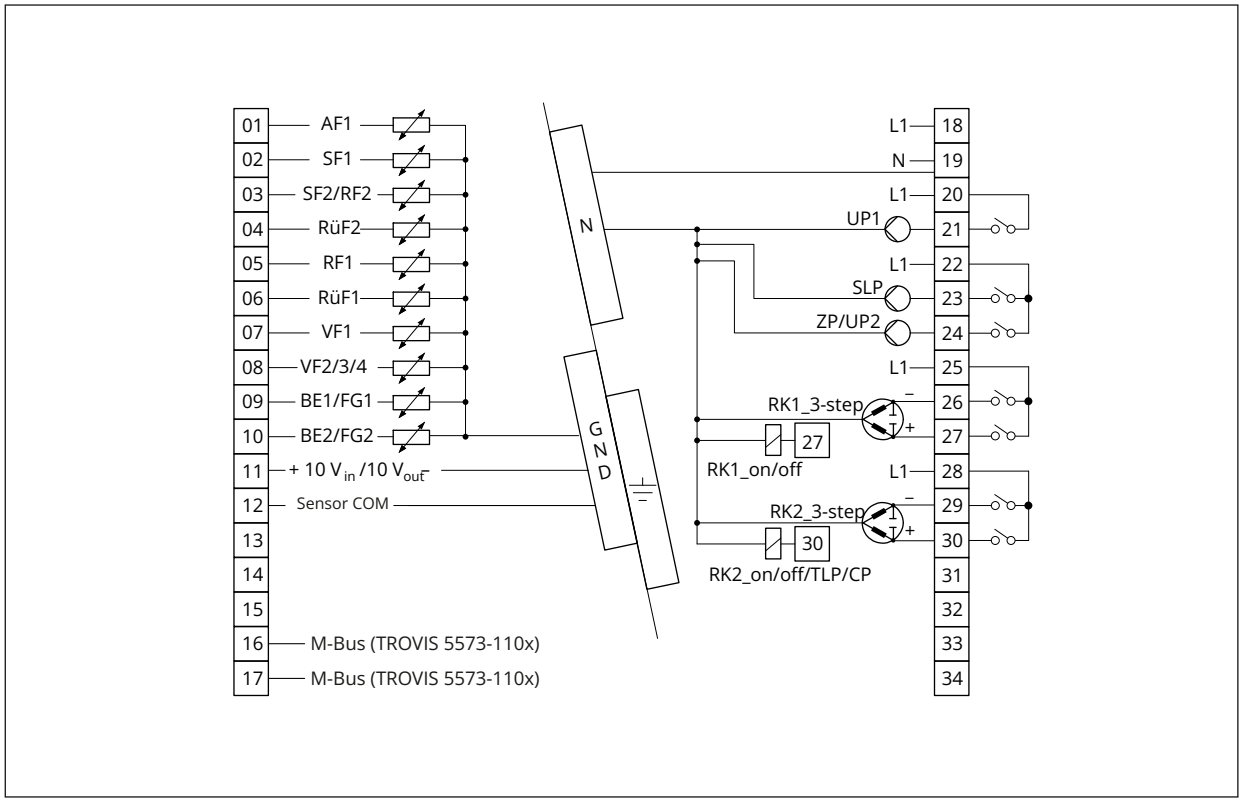

Fig. 5: *Wiring of TROVIS 5573 Controller with high base*

Abbreviations

AF	Outdoor sensor
BE	Binary input
CP	Solar circuit pump
FG	Potentiometer
RF	Room sensor
RK	Control circuit
RüF	Return sensor
SF	Storage tank sensor
SLP	Storage tank charging pump
TLP	Heat exchanger charging pump
UP	Circulation pump (heating)
VF	Flow sensor
ZP	Circulation pump (DHW)

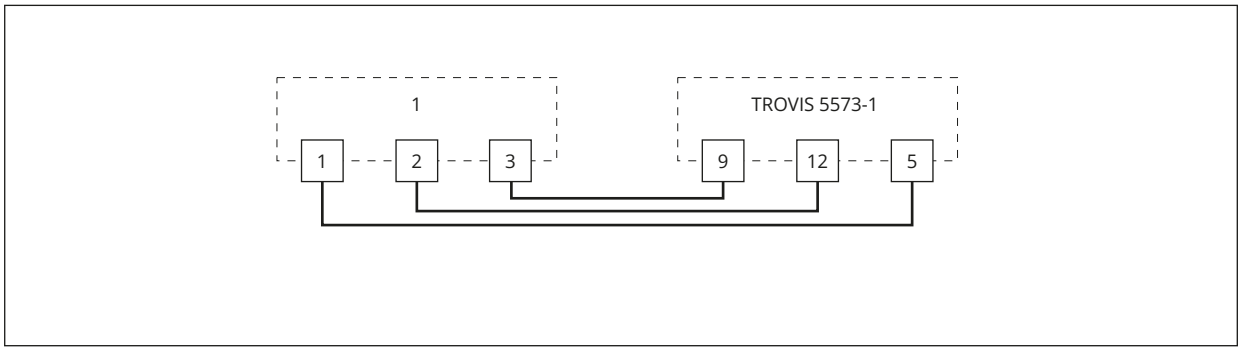

Fig. 6: *Wiring of a room panel for RK1*

1 Type 5257-5(x) Room Panel; Type 5244 no longer available.

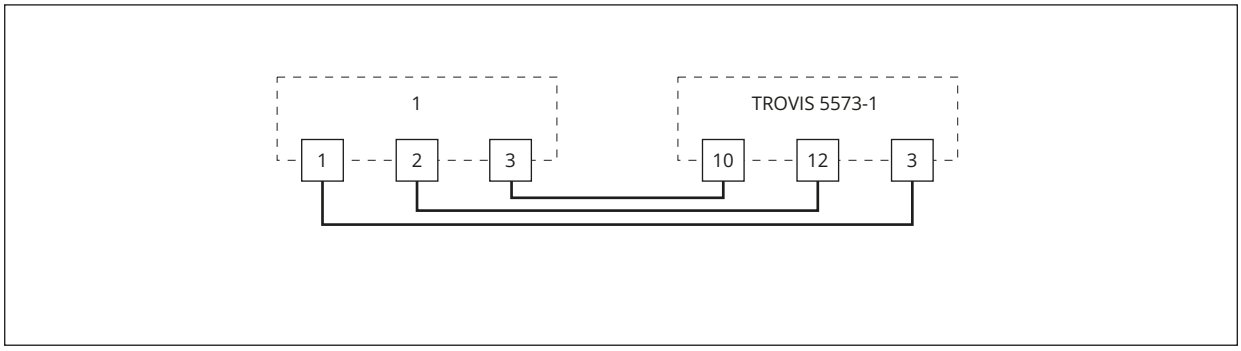

Fig. 7: *Wiring of a room panel for RK2*

1 Type 5257-5(x) Room Panel; Type 5244 no longer available.

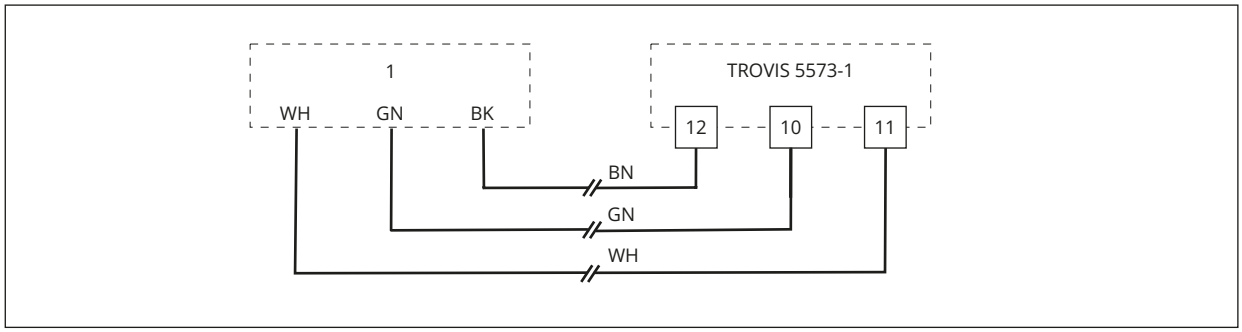

Fig. 8: *Connection of a water flow sensor*

1 Water flow sensor

Water flow sensor			Extension cable		TROVIS 5573-1
GND	BK	----	BN	----	12
Signal	GN	----	GN	----	10
5 V	WH	----	WH	----	11

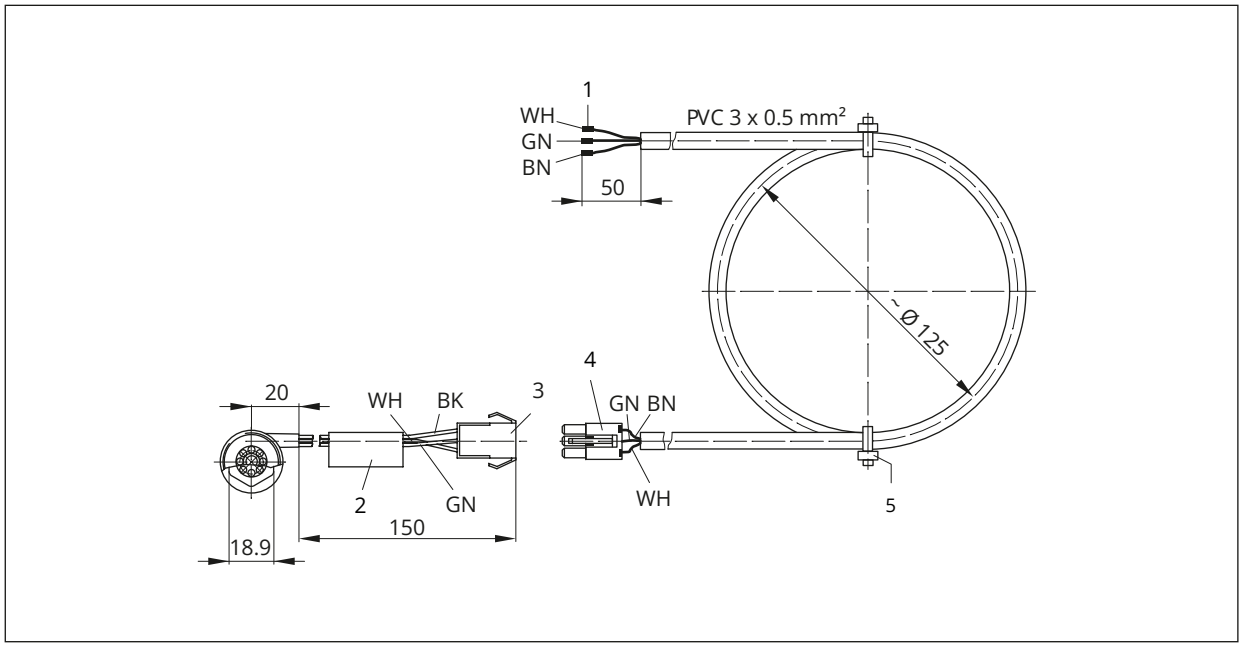

Fig. 9: *Extension cable for water flow sensor*

WH White
GN Green
BN Brown
BK Black
1 Wire end ferrule
2 Nameplate
3 Bushing
4 Connector
5 Cable tie

NOTICE

A flow rate measurement is not performed when the wrong model of the water flow sensor is used.

⇨ *Only use the sensor model specified in Chapter 17.1.*

Table 3: *Permissible conductor cross-section for terminals*

Cable	Conductor cross-section
Single-wire	0.33 to 2 mm^2
Multi-wire	0.33 to 2 mm^2

Length of insulation to be stripped off the conductor ends: 6 mm

6 Operation

The heating controller is operated on site using the operating controls on the front.

6.1 Operating controls

The operating controls are located in the front panel of the heating controller.

The rotary pushbutton is used to select readings, parameters and function blocks.

The rotary switch is used to set the operating mode and the key parameters for each control circuit.

Rotary pushbutton

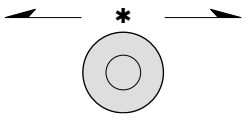

↻	Turn Select readings, parameters and function blocks.
✳	Press Confirm adjusted selection or settings.

Rotary switch

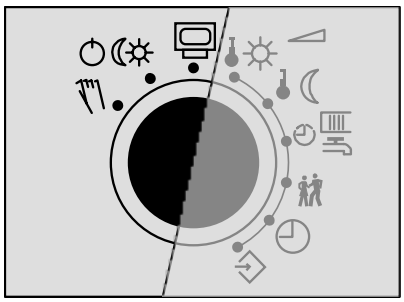

- Operating level
- Operating modes
- Manual level

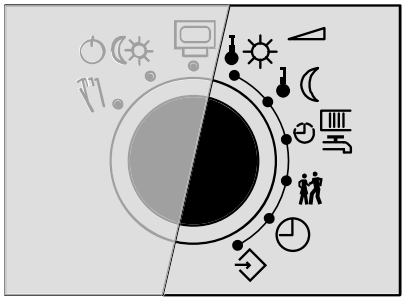

- Day set point (rated room temperature)
- Night set point (reduced room temperature)
- Times-of-use for heating/DHW
- Special time-of-use
- Time/date
- Settings (parameter and configuration level)

6.2 Interfaces

6.2.1 M-Bus interface

(TROVIS 5573-11 only)

Data transmission of up to three meters according to EN 13757 (see Chapter 16).

6.2.2 Optional interfaces

Two-wire bus system

The optional RS-485 communication module is required to connect the controller to a two-wire bus network for Modbus RTU communication with a process control system.

Modbus-TCP/IP communication and SAM DISTRICT ENERGY web application

A SAM MOBILE Gateway or a SAM HOME Gateway is required for Modbus-TCP/IP communication and for connection to the SAM DISTRICT ENERGY web application.

6.2.3 Accessories

Table 4: *Accessories*

Memory module	Order no. 1400-9379
Mini module	Order no. 1400-7436
Data logging module	Order no. 1400-9378
USB Converter 3	Order no. 1400-9377
TROVIS-VIEW software (free of charge)	▶ www.samsongroup.com > DOWNLOADS > Software & Drivers > TROVIS-VIEW
4-port bus hub	Order no. 1400-7140
RS-485 communication module	Order no. 8812-2002
Surge arrester SA 5000	Order no. 1400-9868
▶ SAM HOME Gateway for communication over Ethernet	Type 5660
▶ SAM MOBILE+ Gateway for communication using mobile phone networks	Type 5656

7 Start-up and configuration

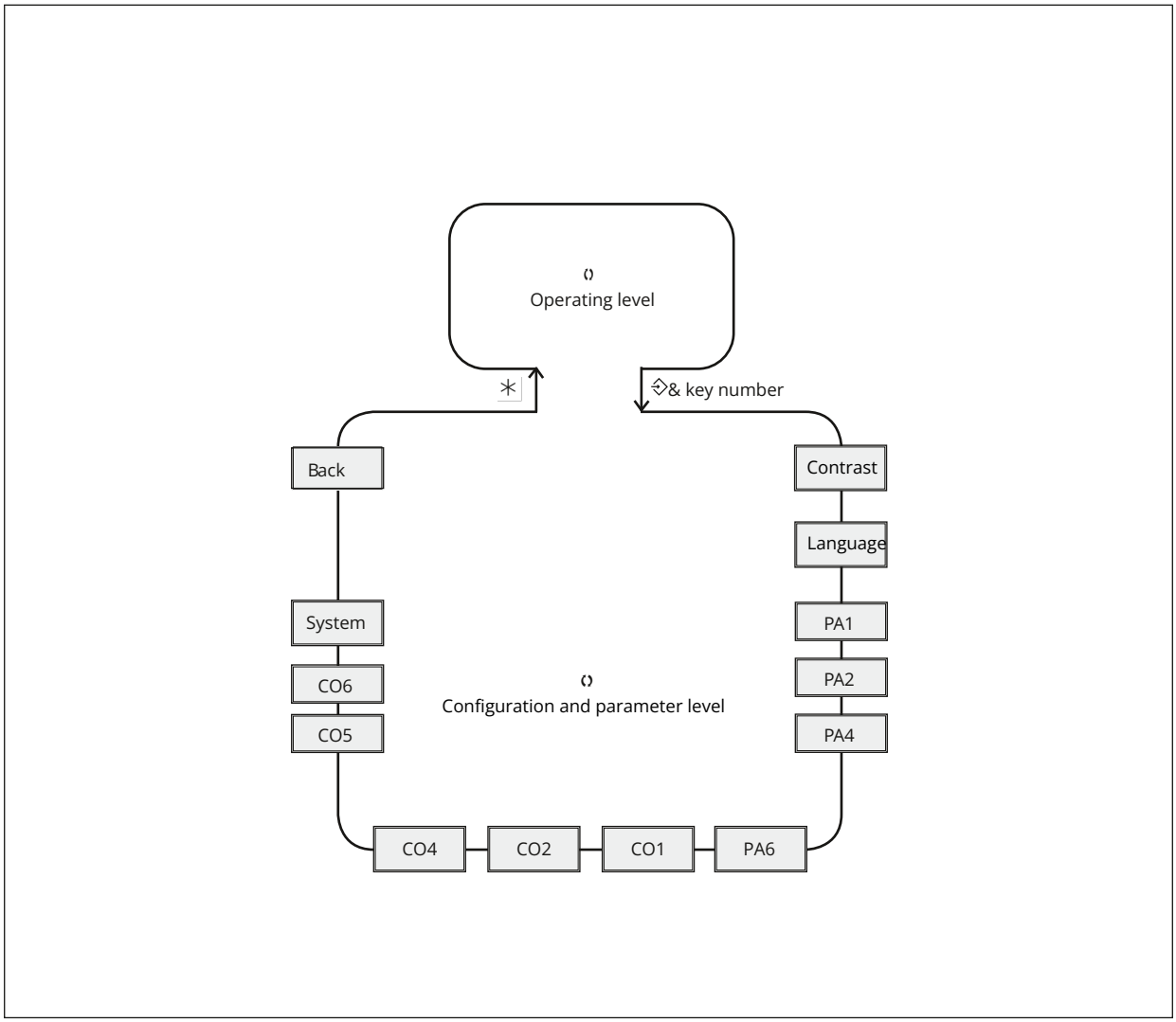

Fig. 10: *Level structure of TROVIS 5573-1*

Legend for level structure

PA1/CO1:	HC1 (heating circuit 1)
PA2/CO2:	HC2 (heating circuit 2)
PA4/CO4:	DHW circuit
PA6/CO6:	Communication
Attachments:	System code number

The work described in this chapter is to be performed only by personnel appropriately qualified to carry out such tasks.

⇨ **Before start-up, make sure the following conditions are met:**

- The heating controller is properly mounted according to the instructions.
- The electrical connection is properly performed.
- The firmware corresponds to the version that is currently available.

The currently valid firmware can be downloaded at ▶ www.samsongroup.com > DOWNLOADS > Software & Drivers > Firmware (see Chapter 10).

The heating controller is adapted to its control task by performing start-up. Start-up usually involves performing several steps:

1. Change the contrast of the display to adapt it to the installation conditions (see Chapter 7.1).
2. Change the display language as required for the operating personnel (see Chapter 7.2).
3. Select the hydraulic schematics (see Chapter 7.3).
4. Change functions and parameters to adapt the system (see Chapters 7.4 and 7.5).
5. Calibrate the sensors (see Chapter 7.6).

The modifications of the controller configuration and parameter settings described in this chapter can only be performed after the valid key number has been entered.

The valid key number for first start-up can be found at the back of these mounting and operating instructions. To avoid unauthorized use of the service key number, remove the page or make the key number unreadable. In addition, it is possible to enter a new, customized key number (see Chapter 7.7).

7.1 Changing the display contrast

The contrast of the display can be changed to adapt it to the installation conditions.

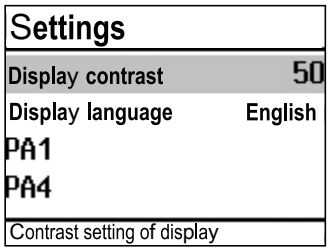

Turn the rotary switch to ⟐ (settings).
- ⟲ Enter the currently valid key number.
- ∗ Confirm key number.
- ⟲ Select 'Display contrast'.
- ∗ Activate editing mode for the display contrast. The current setting is shown inverted on the display.
- ⟲ Change the display contrast.
- ∗ Confirm setting.

Turn the rotary switch to ⊟ (operating level).

7.2 Changing the display language

The default display language is German. After additional language files have been downloaded onto the controller, the display language can be changed as follows:

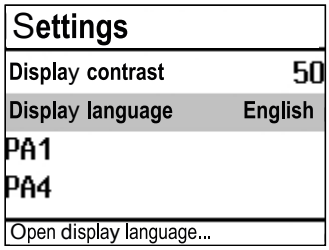

Turn the rotary switch to ⟐ (settings).
- ⟲ Enter the currently valid key number.
- ∗ Confirm key number.
- ⟲ Select 'Display language'.
- ∗ Activate editing mode for the language setting. The currently valid language is selected.
- ⟲ Change the language setting accordingly.
- ∗ Confirm setting.

Turn the rotary switch to ⊟ (operating level).

7.3 Setting the system code number

Different hydraulic schematics are available. Each hydraulic schematic is represented by a system code number. The systems are shown together with their ready-configured functions (see Chapter 16).

A system is adapted to individual requirements by setting the functions and parameters. Changing the system code number resets previously adjusted function blocks to their default settings. Function block parameters and parameter level settings remain unchanged.

The system code number is set in the configuration and parameter level.

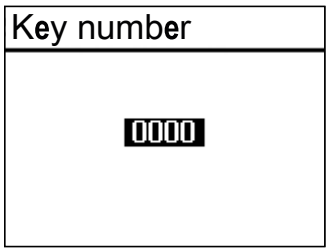

Turn the rotary switch to ⊕ (settings).
⟲ Enter the currently valid key number.
∗ Confirm key number.

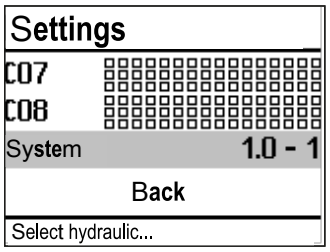

⟲ Select 'System'.
∗ Open 'System'.

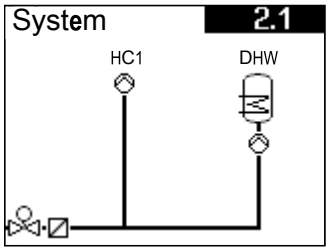

⟲ Select a system (see Chapter 16).

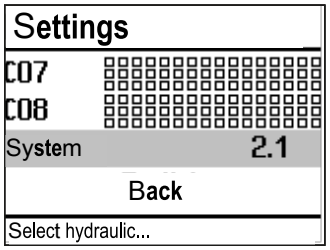

∗ Confirm the system selected.
⟲ Select 'Back'.
∗ Exit menu.
Turn the rotary switch to ⊟ (operating level).

7.4 Activating and deactivating functions

A function is activated or deactivated in the associated function block. "Appendix A (configuration instructions)" contains a detailed description of all functions.

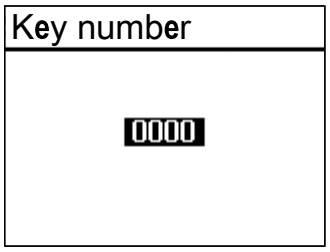

Turn the rotary switch to ⊕ (settings).
⟲ Enter the currently valid key number.
∗ Confirm key number.

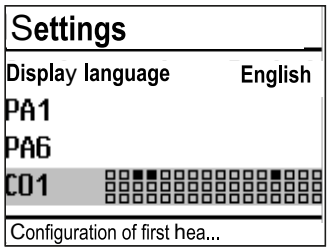

- Select the required configuration level.
  - CO1: Heating circuit HC1
  - CO2: Heating circuit HC2
  - CO3: Heating circuit HC3
  - CO11: Heating circuit HC11
  - CO12: Heating circuit HC12
  - CO13: Heating circuit HC13
  - CO4: Domestic hot water (DHW)
  - CO5: System-wide functions
  - CO6: Modbus communication

  Active function blocks are indicated by the black squares.
  ⇨ Only the configuration levels that can be controlled by the selected system are available for selection.

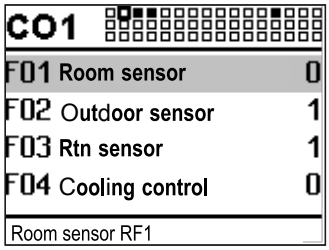

∗ Open the configuration level.
The first function block is selected (highlighted in gray).

- Select the required function.

Functions without function block parameters:

∗ Activate editing mode for the function.
The currently active configuration '0' or '1' is shown inverted on the display.
- Activate function (1) or deactivate function (0).

∗ Confirm configuration.

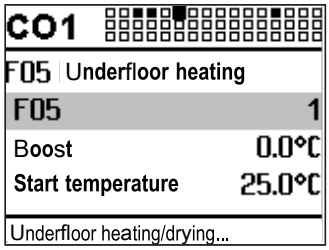

Functions with function block parameters:

∗ Open function.
- Select configuration.

∗ Activate editing mode for configuration.
The currently active configuration '0' or '1' is shown inverted on the display.
- Activate function (1) or deactivate function (0).

∗ Confirm configuration.
- Select function block parameter.

∗ Activate editing mode for the function block parameter.
The current setting is shown inverted on the display.
- Set function block parameter.

Proceed in the same manner to set further function blocks.

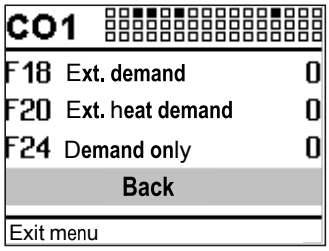

Exit the configuration level:

- Select 'Back'.

∗ Exit the configuration level.

To adjust further function blocks in other configuration levels, repeat steps highlighted in gray.
Turn the rotary switch to ⊟ (operating level).

i Note

All function block settings are saved in a non-volatile memory in the heating controller.

7.5 Changing parameters

Depending on the system code number selected and the activated functions, not all parameters will be available. "Appendix A (configuration instructions)" contains a detailed description of all parameters.

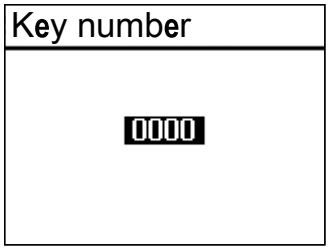

Turn the rotary switch to ⟐ (settings).
- ⟲ Enter the currently valid key number.
- ∗ Confirm key number.

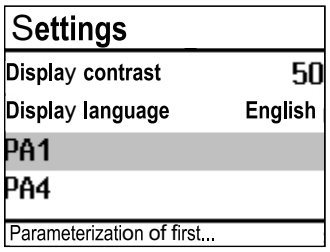

- ⟲ Select the required parameter level.
  - PA1: Heating circuit HC1
  - PA2: Heating circuit HC2
  - PA3: Not available
  - PA4: Domestic hot water (DHW)
  - PA5: Not available
  - PA6: Modbus communication

  ⇨ Only the parameter levels that can be controlled by the selected system are available for selection.

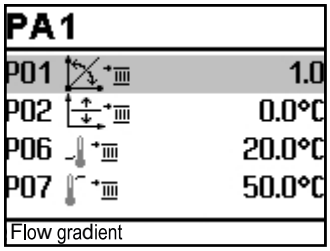

- ∗ Open the parameter level.
  The first parameter is selected (highlighted in gray).
- ⟲ Select the parameter.
- ∗ Activate editing mode for the parameter.
  The current setting is shown inverted on the display.
- ⟲ Set the parameter.
- ∗ Confirm setting.

Proceed in the same manner to change further parameters.

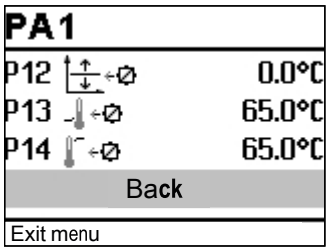

Exit the parameter level:
- ⟲ Select 'Back'.
- ∗ Exit the configuration level.

To adjust further function blocks in other configuration levels, repeat steps highlighted in gray.
Turn the rotary switch to ⊟ (operating level).

i Note

All function block settings are saved in a non-volatile memory in the heating controller.

7.6 Calibrating sensors

Temperature sensors are used to measure various temperatures. These sensors are connected to the heating controller. The heating controller is designed for connection of Pt1000, PTC and Ni1000 sensors.

– CO5 → F01 - 1, F02 - 0: Pt 1000
– CO5 → F01 - 0, F02 - 0: PTC
– CO5 → F01 - 1, F02 - 1: Ni 1000

⇨ See Chapter 3.5 for sensor resistance tables.

If the temperature values displayed at the heating controller differ from the actual temperatures, the measured values of all connected sensors can be recalibrated. To calibrate a sensor, the currently displayed value must be changed to match the temperature (reference temperature) measured directly at the point of measurement.

⇨ Activate calibration in CO5 with F20.

⇨ Delete the incorrectly performed calibration with F20 - 0.

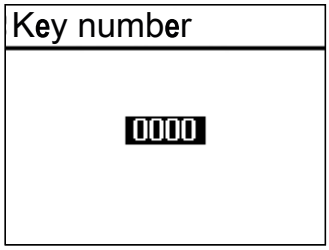

Turn the rotary switch to ⟐ (settings).
⟲ Enter the currently valid key number.
∗ Confirm key number.

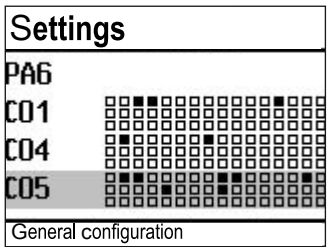

⟲ Select CO5 configuration level.
∗ Open CO5 configuration level.
⟲ Select function block F20.
∗ Activate editing mode for function block F20.

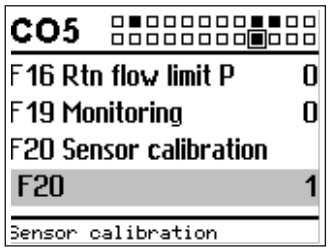

⟲ Select F20 configuration.
∗ Activate editing mode for configuration.
The currently active configuration '0' or '1' is shown inverted on the display.
⟲ Activate function block ('1').
∗ Confirm activation.

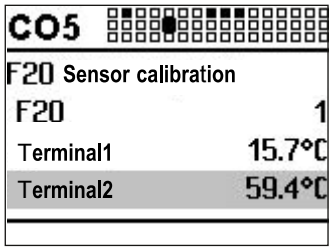

⟲ Select the temperature that you want to calibrate.
∗ Open calibration.
The temperature is shown inverted on the display.
⟲ Correct measured value.
Read the actual temperature directly from the thermometer at the point of measurement and enter this value as the reference temperature.
∗ Confirm corrected measured value.
Proceed in the same manner to calibrate further sensors.

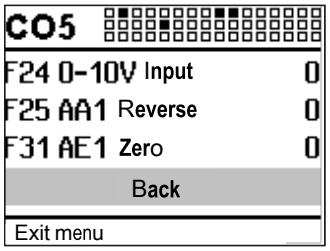

Exit the configuration level:

- Select 'Back'.
- Exit the configuration level.

Turn the rotary switch to (operating level).

7.6.1 Special values

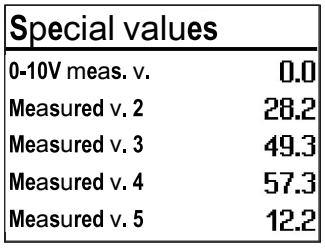

If sensor inputs not relevant to closed-loop control are connected, the 'Special values' screen is automatically displayed in the heating controller's operating level.
A maximum of five measured values (sensor input or 0 to 10 V input) can be displayed. These readings are displayed without a unit. '°C' is the unit for all sensor inputs.
The value that has been configured with CO5 → F25 - 1 and originates from the 0 to 10 V input is displayed in % (percent).

Note

The measured value number corresponds to the terminal number, e.g. measured value 3 = terminal 3.

7.7 Entering customized key number

To prevent the function and parameter settings being changed by unauthorized users, a customized key number can be added to the fixed service key number. You can select a customized key number between 0100 and 1900.

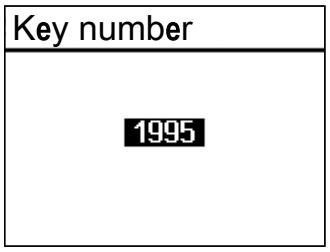

Turn the rotary switch to (settings).

- Enter key number 1995.
- Confirm key number.
- Enter valid key number.
- Confirm key number.
- Enter customized key number.
- Confirm customized key number.

This number is the new valid key number.
Turn the rotary switch to (operating level).

8 Set-up

8.1 Selecting the operating mode

The heating controller can be operated in the following modes:

Day mode (rated operation):

Regardless of the programmed times-of-use and summer mode, the set points relevant to rated operation are used by the controller.

Icon: ☼☼

Night mode (reduced operation):

Regardless of the programmed times-of-use, the set points relevant to reduced operation are used by the controller.

Icon: ☽ ☽

Control operation deactivated:

Regardless of the programmed times-of-use, control operation of the heating circuits and DHW heating remains deactivated. The frost protection is activated, if need be.

Icon: ⏻ ⏻

Icons when the frost protection is activated:

HC	⏻ ☽
DHW	⏻ ☼

Automatic mode:

During the programmed times-of-use, the controller works in day mode (rated operation). Outside these times-of-use, the controller is in night mode (reduced operation), provided control operation has not been deactivated due to the outdoor temperature. The heating controller switches automatically between both operating modes.

Icon within the times-of-use: ◷☼

Icon outside the times-of-use: ◷ ☽

Manual mode:

Valves and pumps can be controlled manually (see Chapter 8.7 for further details).

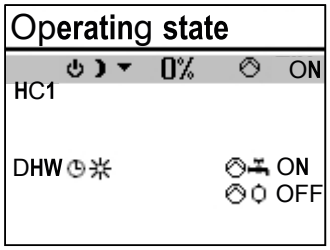

Turn the rotary switch to ⁰⁰ (operating modes).
The operating states of all system control circuits are displayed:
- Heating circuit HC1
- Heating circuit HC2
- DHW heating

Only the control circuits that can be controlled by the selected system are available for selection.
() Select the control circuit.

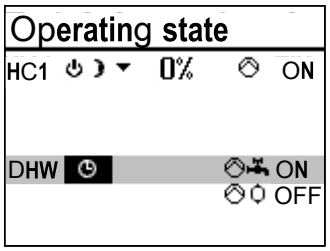

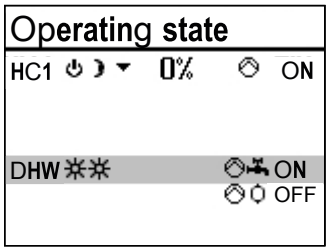

- ∗ Activate editing mode for the control circuit.
  The operating mode is shown inverted on the display.
- ↻ Select operating mode:
  - Automatic mode
  - Day mode
  - Night mode
  - System deactivated
- ∗ Confirm the operating mode.

The heating controller is usually in the automatic mode.

8.2 Schedules

The controller operates according to the programmed schedules in automatic mode.

8.2.1 Setting the time and date

The current time and date need to be set immediately after start-up and after a power failure lasting more than 24 hours. This is the case when the time blinks on the display.

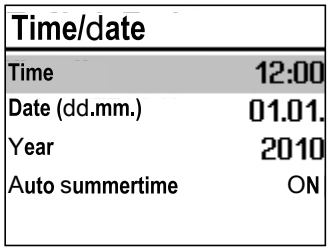

Turn the rotary switch to ⊙ (time/date).
The current time is selected (highlighted in gray).

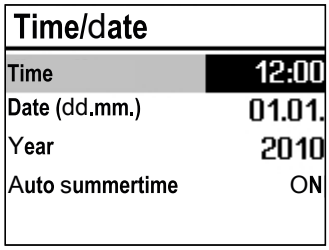

- ∗ Activate editing mode for the time.
  The time reading is inverted.
- ↻ Change the time.
- ∗ Confirm the time setting.

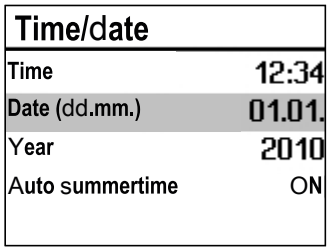

- ↻ Select 'Date' (dd.mm).

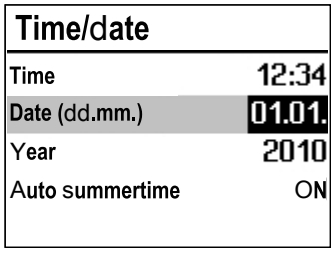

- ∗ Activate editing mode for the date.
  The date reading is inverted.
- ↻ Change date (day.month).
- ∗ Confirm the date setting.

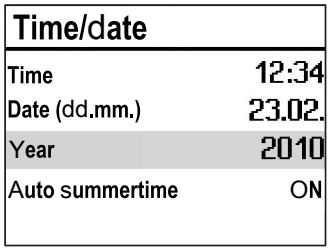

- ↻ Select 'Year'.

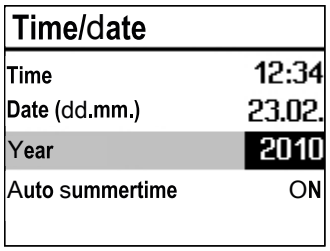

∗ Activate editing mode for the year.
The year reading is inverted.
⟲ Change the year.
∗ Confirm the year setting.

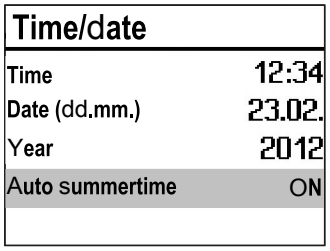

Deactivate or activate the automatic summer/standard time switchover as required.
⟲ Select automatic summer/standard time switchover.

∗ Activate the editing mode for automatic summer/standard time switchover.
The current setting is shown inverted on the display:
ON = Summer/standard time switchover active
OFF = Summer/standard time switchover not active

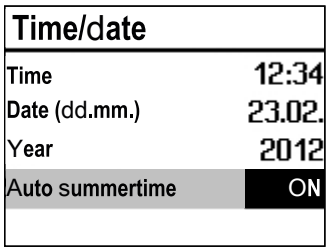

⟲ Deactivate or activate the automatic summer/standard time switchover.
∗ Confirm deactivation/activation.
Turn the rotary switch to ⊟ (operating level).

i Note

The correct time remains displayed after a power failure of 24 hours. Normally, the time is still correct at least 48 hours after a power failure.

8.2.2 Setting the times-of-use

Three times-of-use can be programmed for each day of the week.

Parameters	Default		Value range
	HC1, HC2	DHW, ZP	
Start first time-of-use	06:00	00:00	
Stop first time-of-use	22:00	24:00	
Start second time-of-use	--:--	--:--	00:00 to 24:00 h
Stop second time-of-use	--:--	--:--	in steps of 15 minutes
Start third time-of-use	--:--	--:--	
Stop third time-of-use	--:--	--:--	

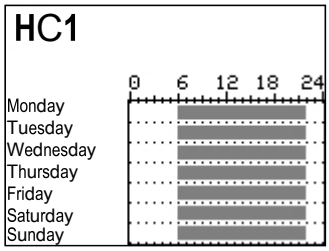

Turn the rotary switch to (times-of-use).
The first control circuit is displayed together with its programmed times-of-use.

- Program the times-of-use of another control circuit, if required:
  - Heating circuit HC2
  - Heating circuit HC3
  - Heating circuit HC11
  - Heating circuit HC12
  - Heating circuit HC13
  - DHW heating
  - Circulation pump ZP

Only the control circuits that can be controlled by the selected system are available for selection.

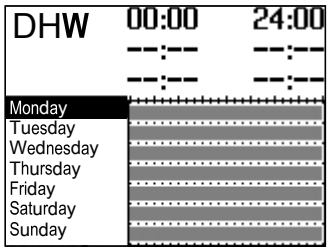

∗ Activate editing mode for the control circuit. The times-of-use for Monday are displayed.

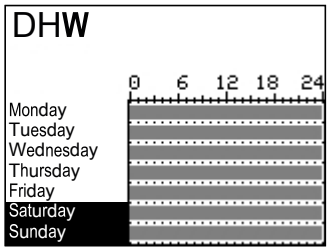

- Select period/day for which the times-of-use are to be valid. The times-of-use can be programmed for individual days or for a block of days, e.g. Monday to Friday, Saturday and Sunday or Monday to Sunday. The selected days are shown inverted on the display.

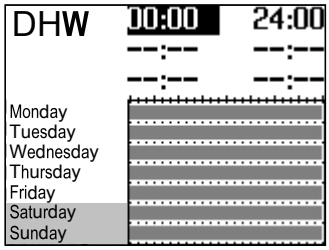

∗ Activate editing mode for the period/day.
The start time of the first time-of-use period can now be edited (inverted reading).

- Change start time.
  The time is set in steps of 15 minutes.

∗ Confirm the start time.
The stop time of the first time-of-use period can now be edited.

- End stop time.
  The time is set in steps of 15 minutes.

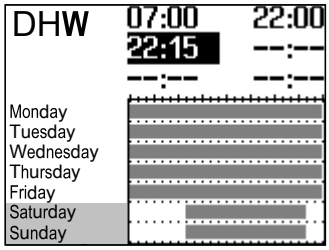

∗ Confirm the stop time.
The start time of the second time-of-use period can now be edited.

To set the second and third times-of-use periods, repeat steps highlighted in gray. If no further times-of-use are to be programmed for the selected time period/day, exit the menu by confirming the indicated start time twice (2x ∗). Proceed in the same manner to program further periods/days.

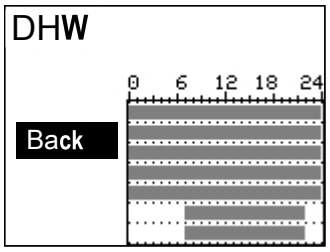

After setting all times-of-use:
- Select 'Back'.
- Exit the times-of-use setting.

Turn the rotary switch to (operating level).

8.2.3 Setting the party timer (special time-of-use)

Rated operation in the corresponding control circuit (HC1, HC2, HC3 or DHW) is started or continued for the time period set in the party mode. When the countdown has finished, the party timer returns to --:--.

Parameters	Default	Value range
HC1 party timer	--.-- h	0 to 48 h; in steps of 15 minutes
HC2 party timer	--.-- h	0 to 48 h; in steps of 15 minutes
HC3 party timer	--.-- h	0 to 48 h; in steps of 15 minutes
DHW party timer	--.-- h	0 to 48 h; in steps of 15 minutes

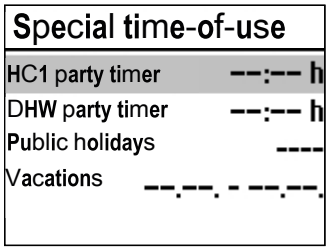

Turn the rotary switch to (special times-of-use).
The party timer for the first control circuit is now selected.
- Program the times-of-use of another control circuit, if required:
  - Heating circuit HC2
  - Heating circuit HC3
  - DHW heating

Only the control circuits that can be controlled by the selected system are available for selection.

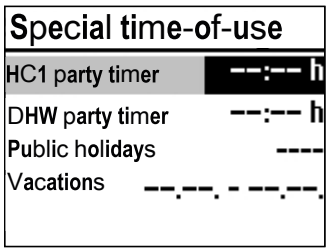

- Activate editing mode for the party timer.
  The party timer is now in the editing mode (inverted display).
- Extend day mode as required.
  The time is set in steps of 15 minutes.

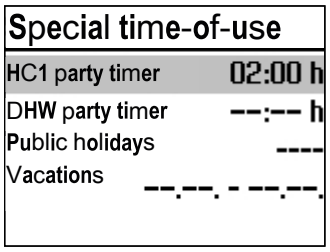

- Confirm setting.
  After setting the party timer:
  Turn the rotary switch to (operating level).

Note

The party timer runs down in steps of 15 minutes.

8.2.4 Programming public holidays (special times-of-use)

On public holidays, the times-of-use specified for Sunday apply.

A maximum of 20 public holidays can be entered.

Parameters	Default	Value range
Public holidays	--.--	01.01 to 31.12

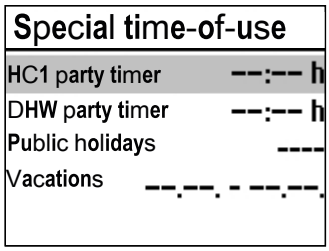

Turn the rotary switch to (special times-of-use).
The party timer for the first control circuit is now selected.
- Select 'Public holidays'.

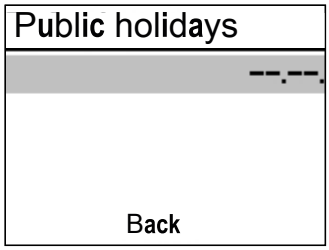

- Start the public holiday setting.
  The first public holiday setting is now selected. --:-- is displayed if no public holidays (default setting) have been programmed.
- If applicable, select '--:--'.

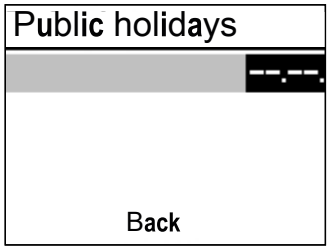

- Activate the editing mode for public holidays.
- Set the date of the public holiday.
- Confirm the date.

Proceed in the same manner to program further public holidays.

Deleting public holidays:
- Select the holiday you wish to delete.
- Confirm the date.
- Select '--:--'.
- Confirm setting.

The public holiday is deleted.

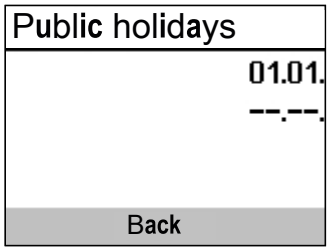

After programming all public holidays:
- Select 'Back'.
- Exit the public holiday setting.

Turn the rotary switch to (operating level).

Note

Public holidays that are not assigned to a specific date should be deleted by the end of the year so that they are not carried over into the following year.

8.2.5 Programming vacation periods (special times-of-use)

The system runs constantly in reduced mode during vacation periods. A maximum of ten vacation periods can be entered. Each vacation period can be separately assigned to the heating circuits HC1, HC2 and DHW circuit or to all the control circuits in one go.

Parameters	Default	Value range
Vacation period	--.-- - --.--	01.01 to 31.12

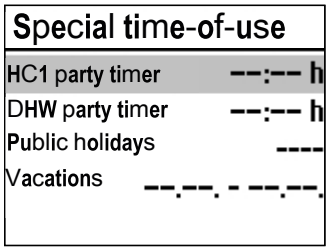

Turn the rotary switch to (special times-of-use).
The party timer for the control circuit is now selected.
- Select 'Vacations'.

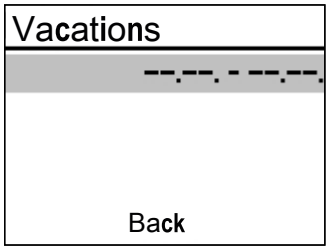

- Start the vacations setting.
  The first vacations setting is now selected. '--.-- - --.--.' is displayed if no vacations (default setting) have been programmed.
- If applicable, select '--.-- - --.--'.

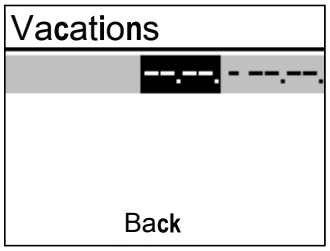

- Activate the editing mode for vacations.
  The start date can now be edited (inverted reading).
- Set the start date.
- Confirm the start date.
- Set the end date.

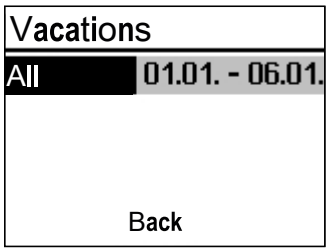

- Confirm the end date.
  'All' is selected.
- If the vacation period is only to be valid for one control circuit, select the required control circuit:
  - Heating circuit HC1
  - Heating circuit HC2
  - DHW heating

  Only the control circuits that can be controlled by the selected system are available for selection.
- Confirm.

Note

An active vacation period is indicated on the display by the icon.

Proceed in the same manner to program further vacation periods.

Deleting vacation periods:
- Select the start date of the period you wish to delete.
- Confirm.
- Select '--.-- - --.--'.
- Confirm.

The vacation period is deleted.

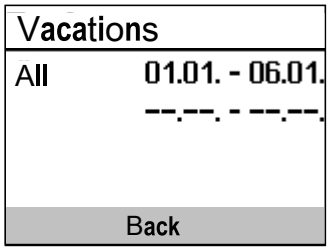

After programming all public holidays:
- Select 'Back'.
- Exit the vacations setting.

Turn the rotary switch to (operating level).

Note

Vacations should be deleted by the end of the year so that they are not carried over into the following year.

8.3 Entering day and night set points

The day and night set points can be programmed for each control circuit and for the deactivation values based on the outdoor temperature.

Note

When the four-point characteristic mode without room sensor and the optimizing mode or flash adaptation is used, it is not possible to adjust the set points for the room temperature.

The associated control circuit is immediately switched off in automatic or night mode when the outdoor temperature exceeds the limit 'OT deactivation value' (heating) or falls below the limit 'OT deactivation value' (cooling). The valve is closed and the pump is switched off after t = 2 x Valve transit time. Heating or cooling immediately starts again when the outdoor temperature falls below or exceeds the limit respectively (minus 0.5 °C hysteresis).

Switch position

Parameters	Default	Value range
HC1 room temperature	20.0 °C	0.0 to 40.0 °C
HC1 room temperature	20.0 °C	0.0 to 40.0 °C
HC2 room temperature	20.0 °C	0.0 to 40.0 °C
DHW temperature	60.0 °C	Min. to max. DHW temperature
HC1 OT deactivation value	22.0 °C	0.0 to 50.0 °C
HC2 OT deactivation value	22.0 °C	0.0 to 50.0 °C

Switch position

Parameters	Default	Value range
HC1 room temperature	15.0 °C	0.0 to 40.0 °C
HC1 room temperature	15.0 °C	0.0 to 40.0 °C
HC2 room temperature	15.0 °C	0.0 to 40.0 °C
DHW temperature	40.0 °C	Min. to max. DHW temperature
HC1 OT deactivation value	+15.0 °C	–50.0 to +50.0 °C
HC2 OT deactivation value	+15.0 °C	–50.0 to +50.0 °C

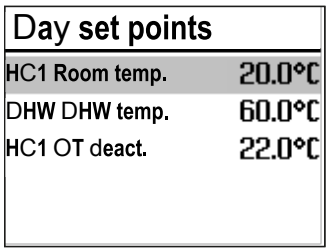

Turn the rotary switch to (day set point) or (night set point). The day and night set points appear on the display one after the other.
→ Only those day and night set points that can be controlled by the selected system are available for selection.

i Note

The deactivation values are located in a separate menu ('Deactivation values') for systems with three control circuits.

Select the set point.

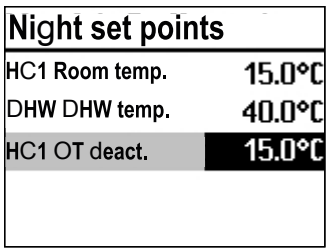

∗ Activate editing mode for the set point.
Adjust the set point.
∗ Confirm setting.
Proceed in the same manner to adjust further set points.

After adjusting all the set points:
Turn the rotary switch to (operating level).

8.4 Reset to default settings

All parameters configured using the rotary switch as well as parameters in the PA1 and PA2 parameter levels can be reset to their default settings. This does not apply to the maximum flow temperature and the return temperature limits in PA1 and PA2.

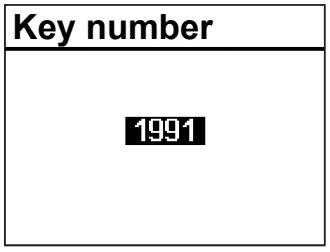

Turn the rotary switch to (settings).
Enter key number 1991.
∗ Confirm setting.
The default settings have been restored when the following icon appears on the controller display:

8.5 Information readings

Different kinds of information can read off the heating controller display during operation. The heating controller display usually shows the date, time and a current temperature when the rotary switch is switched to the 'Operating level' position ().

Outdoor-temperature-compensated control · Current temperature = outdoor temperature

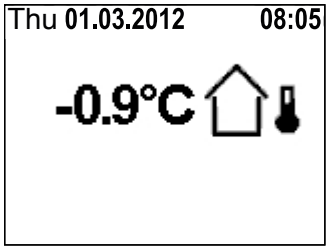

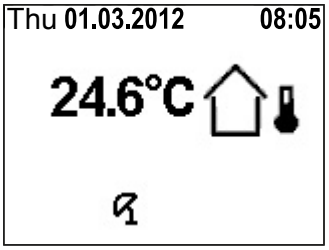

Deactivation depending on outdoor temperature active

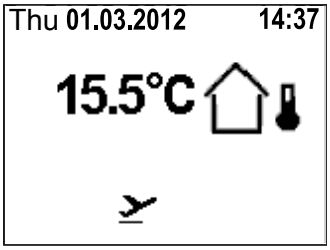

Vacation period active

Fixed set point control · Current temperature = Flow temperature

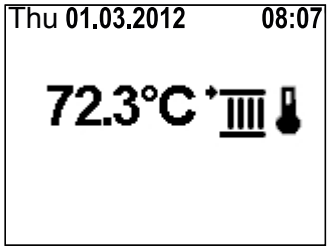

Further information can be displayed by turning the rotary pushbutton:

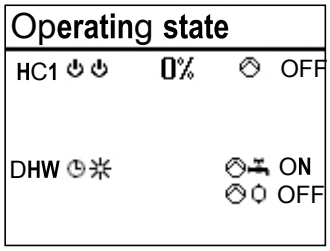

() Operating state:
The following applies for heating circuits HC1, HC2, HC3, HC11, HC12 and HC13:

1 Heating circuit
2 Current operating mode
3 Valve ▲ OPEN/valve ▼ CLOSED
4 Current positioning value
5 Circulation pump (heating) ON/OFF

The following applies for DHW heating:

Current operating mode — Pump ON/OFF

Storage tank charging pump
Circulation pump (DHW)
Solar circuit pump

See Chapter 8.1 for further information.

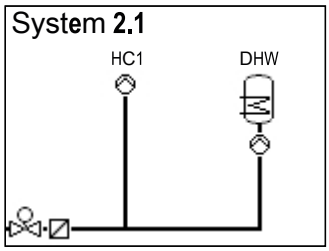

() Selected system code number
See Chapter 16 for further information.

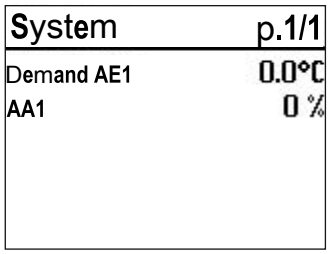

∗ Reading in percent of the 0 to 10 V analog signal as the 'AA1' value as well as measured values for the entire system (e.g. measured values and limits of a flow rate or power limitation or the demand to be processed), if activated.

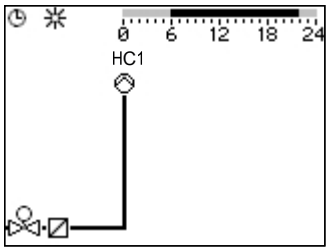

- Times-of-use (depending on system code number)
  - Heating circuit HC1
  - Heating circuit HC2
  - DHW heating

  The day mode times are highlighted in black on the time chart. Night mode and deactivation times are highlighted in gray on the time chart.
- ∗ Measured values, set points and limits of the system section shown are displayed.

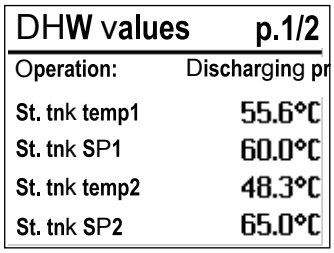

The 'DHW values' screen also includes information on the operating state of the DHW heating.
The following messages are generated:
- 'Standby'
- 'Monitoring'
- 'Circulation' (= circulation losses are compensated for)
- 'Demand'
- 'Charging'
- 'Lag time'
- 'Intermediate heating'
- 'Discharging protection'

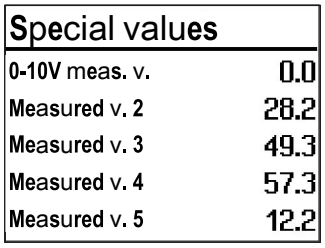

- Special values:
  Measured values from additional sensor inputs (not relevant to the closed-loop control) or from the 0 to 10 V inputs are displayed.

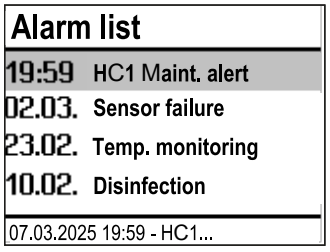

- Alarm list
  The last four alarm entries are listed.
- ∗ Open the alarm list and select further alarm entries [◊]. Further information on an alarm (including time and date when it occurred) runs across the display.

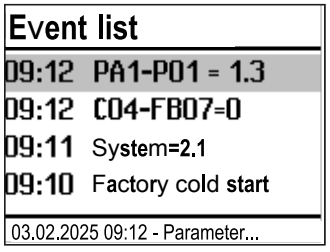

- Event list
  The last four event entries are listed.
- ∗ Open the event list and select further event entries [◊].
  Further information on an event (including time and date when it occurred) runs across the display.

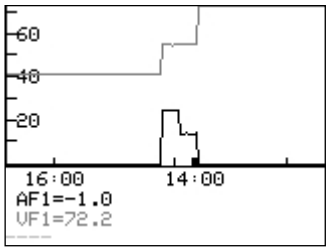

- Trend-Viewer
  The standard graph shows the data measured by the outdoor sensor AF1 and flow sensor VF1 plotted over time.

Further information can be displayed by turning the rotary pushbutton:

Extended operating level

Information	
Device ID	5573
Serial number	2604
Software version	2.03
Hardware version	1.33

The following details on the controller version (device identification, serial number, software and hardware versions) and meter bus are displayed in the extended operating level.

Information	p.1/3
Modbus station	1
Logging memory	OFF
Solar operation	0 h
Flow rate 1	0
Special flags	3840

Turn the rotary switch to ⚙ (settings).
- Enter key number 1999.
- ✳ Confirm key number.
  Turn the rotary switch to ▤ (operating level).
- Select 'Information'.

Information	p.2/3
VF1-RüF1	--.-°C
Y1 avg mth bfr lst	10240
Y1 avg last month	0
Y1 avg this month	0
Binary inputs	

The additional 'Meter' screen is displayed, which includes the connection status and further meter data for meters 1 to 3 when the meter bus is activated (see Chapter 16). When the flow rate and/or power limitation is activated, the respective measured values and limits are also displayed after confirming the system scheme.

Information	p.3/3
Reason for reset	0x00

i Note

The additional information is hidden when the key number 1999 is entered again.
The key number 1999 cannot be used to change the controller's configuration and parameter settings. A separate key number exists for configuration and parameterization (see Chapter 7).

8.6 Adapting the Trend-Viewer

The standard graph shows the data measured by the outdoor sensor AF1 and flow sensor VF1 plotted over time.

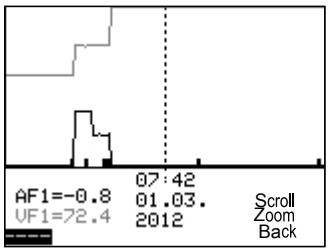

∗ Open the Trend-Viewer.

Adding measured values

- Select **– – – –** on the display.
- ∗ Activate editing mode for sensor selection.
- Select the sensor.
- ∗ Confirm.

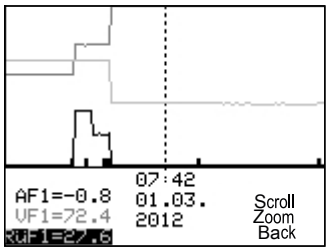

Deleting measured values

- Select the sensor whose measured values are no longer to be displayed.
- ∗ Activate editing mode for the sensor.
- Select **– – – –** on the display.
- ∗ Confirm deletion.

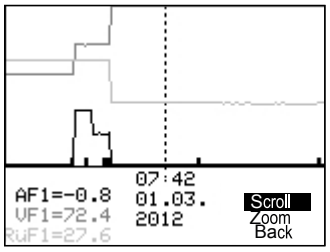

Shifting the time line

- Select 'Scroll'.
- ∗ Activate editing mode for the scroll function.

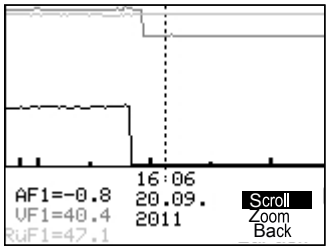

- Shift the time line.
- ∗ Confirm time display.

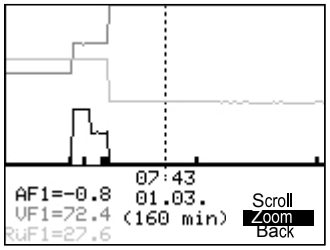

Zooming in/out

- Select 'Zoom'.
- ∗ Open zoom function.
- Zoom in or out.
- ∗ Confirm display.

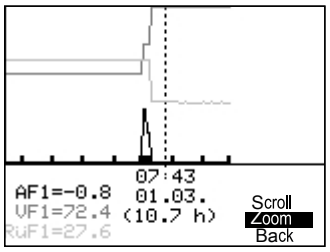

Closing the Trend-Viewer

- Select 'Back'.
- ∗ Close the Trend-Viewer.

8.7 Operating the heating controller in manual mode

All of the outputs for the heating controller are performed in manual mode.

NOTICE

System damage caused by frost in manual mode.

The frost protection function is deactivated in the manual mode.

⇨ *Do not run the heating during cold weather in the manual mode for long periods of time.*

Manually changing the positioning value/switching state

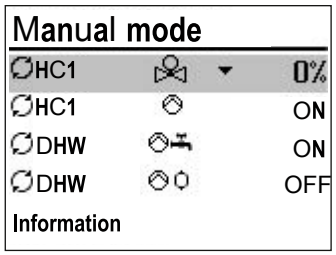

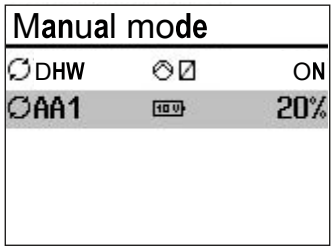

Turn the rotary switch to (manual mode).
The outputs of the configured system are listed one after the other on the display.

- Select the output:
  - Positioning value
  - Circulation pump (heating)
  - Storage tank charging pump
  - Circulation pump (DHW)
  - Solar circuit pump
  - Analog 0 to 10 V signal
  - AA1 0 to 10 V output signal
  - AA3
  - AA4
- Activate editing mode for the output.
- Change the positioning value/switching state.
- Confirm the positioning value/switching state.
  The modified values remain active as long as the controller is in manual mode.

Turn the rotary switch to (operating level). The manual mode is deactivated.

Note

The outputs of the heating controller are not affected by merely turning the rotary switch to (manual mode). The outputs are only changed by entering or changing the positioning values or switching states.

9 Malfunctions

A malfunction is indicated by the blinking ⚠ icon on the display. Additionally, the display is illuminated for one second every 10 seconds.

Press the rotary pushbutton to open the error level. As long as an operational malfunction exists, the error message remains visible on the display, even when it has not been opened by pressing the rotary pushbutton.

The error message is displayed in the error level as specified in the following list (see Chapter 9.1).

⚠ DANGER

Risk of fatal injury due to electric shock while performing electrical connection.

For wiring and connecting the heating controller, observe the relevant electrotechnical regulations of the country of use as well as the technical connection requirements of your local distribution system operator.

⇨ *Only allow properly trained and experienced personnel perform the electrical connection.*

NOTICE

Risk of damage to the heating controller due to incorrectly performed work.

⇨ *Only properly trained personnel appropriately qualified to carry out such tasks must be allowed to perform corrective action.*

Note

After the system code number has been changed or after restarting the heating controller, any error messages are suppressed for approx. three minutes.

9.1 Error list

Sensor failure	=	Sensor failure (see Chapter 9.2)
Disinfection	=	Disinfection temperature not reached (see Chapter 16.3.10)
Max. charging temp.	=	Max. charging temperature reached (see Chapter 16.3.2)
Temp. monitoring	=	Temperature monitor alarm (see Chapter 9.3)
Unauthorized access error	=	Unauthorized access occurred (see Chapter 9.5)
Binary alarm	=	Error message of a binary input
Meter bus error	=	Meter bus communication error
Heat meter error	=	Heat meter error registered

i Note

If error messages that can be confirmed are included in the list shown, you can decide whether you want to confirm them on exiting the error list.

9.2 Sensor failure

As described in the error list, sensor failures are indicated by the 'Sensor failure' error message in the error level. For detailed information, exit the error level and view the different temperature values in the operating level:

Each sensor icon displayed together with three dashes instead of the measured value indicates a defective sensor. The following list explains how the heating controller responds to the failure of the different sensors.

- **Outdoor sensor AF1:**
  In the event that the outdoor sensor fails, the controller uses a flow temperature set point of 50 °C or the 'Max. flow temperature' (PA1, 2 → P07) if 'Max. flow temperature' is lower than 50 °C. With the setting CO1, 2 → F05 - 1 (underfloor heating), the flow temperature set point is 30 °C in the event of a malfunction.
- **Flow sensor(s) in heating circuit(s):**
  In the event that the flow sensors in the heating circuits fail, the associated valve moves to 30 % travel. DHW heating which use such a sensor to measure the charging temperature is suspended.
- **Flow sensors in the DHW circuit with control valve:**
  In the event that the flow sensor VF4 fails, the controller behaves as if VF4 has not been configured. As soon as the control of the charging temperature/DHW temperature becomes impossible (VF2 failed), the associated valve is closed.
- **Return sensor RüF1/RüF2:**
  In the event that the return sensor fails, the controller continues operation without return temperature limitation.
- **Room sensor RF1/RF2**
  In the event that the room sensor fails, the heating controller uses the settings for operation without room sensor. For example, the controller switches from optimizing mode to night mode. The adaptation mode is canceled. The last determined heating characteristic remains unchanged.
- **Storage tank sensors SF1/SF2:**
  In the event that one of the two sensors fails, the storage tank is no longer charged (exception: solar system).
- **Solar circuit sensors SF, VF/RüF:**
  In the event that one of the two sensors fails, the storage tank is no longer charged by the solar system.

9.3 Temperature monitoring

When a system deviation greater than 10 °C persists in a control circuit for 30 minutes, the 'Err 6' error message is generated.

Function	Default	Configuration
Monitoring	0	CO5 → F19 - 1

9.4 Fault alarm output

With the setting CO5 → F07 - 1, the output at terminal 23 or the output at terminal 29 is used for fault indication (specific terminals listed in the table of each system). The fault alarm output is activated (BO = 1 setting) or deactivated (BO = 0 setting) when at least one of the errors from the error list (bold) occurs. This function is not available for systems 4.1, 4.5, 11.1, 11.2, 11.3, 11.6, 16.1 and 16.6.

9.5 Error status register

The error status register is used to indicate controller or system errors. The error messages which cause a change in the state of the configured fault alarm output (CO5 → F07 - 1) are highlighted in the following table (bold).

In the CO8 configuration level, the binary inputs BE1 and BE2 can be added to the error status register.

Either a make or break contact at the binary input can be configured to indicate an error. The heating controller indicates 'Binary alarm' when at least one of the inputs configured in this way registers an error.

Note

If free inputs are to issue binary signals to a building control station without affecting the error status register, activate the corresponding function block in the CO8 configuration level and select 'None' as the function block parameter.

Error message	Decimal value	
Sensor failure	1	1
Disinfection	4	
Max. charging temp.	8	
External error	16	
Temp. monitoring	32	32
Unauthorized access error	64	
Binary alarm	128	
Meter bus error	256	
Heat meter error	512	
		Total
Example: Value of error status register when a sensor fails and a temperature monitoring alarm =		33

10 Servicing

The work described in this chapter is to be performed only by personnel appropriately qualified to carry out such tasks.

10.1 Recommended inspection and testing

SAMSON recommends inspection and testing according to the following table:

Table 5: *Recommended inspection and testing*

Inspection and testing	Action to be taken in the event of a negative result
Check the markings, labels and nameplates on the device for their readability and completeness.	⇨ Immediately renew damaged, missing or incorrect nameplates or labels.
	⇨ Clean any inscriptions that are covered with dirt and are illegible.
Check the electric wiring.	⇨ Tighten any loose terminal screws (see Chapter 5). ⇨ Renew damaged wires.
Check whether the firmware is up to date.	⇨ Download the currently valid firmware at ▶ www.samsongroup.com > DOWNLOADS > Software & Drivers > Firmware and install it (see Chapter 10.2).
Compare the temperature values displayed at the heating controller with the actual temperatures at the point of measurement.	⇨ If the displayed and actual temperatures differ, calibrate the sensors (see Chapter 7).

Tip

The SAMSON NE53 newsletter keeps users up to date on any software or hardware revisions in accordance with NAMUR Recommendation NE 53. Subscribe to the NE53 newsletter at ▶ www.samsongroup.com > SERVICE > NE53 newsletter.

10.2 Firmware update

10.2.1 Update over RS-232 interface

Requirements

- Computer with Microsoft Windows® operating system
- USB/RS-232 adapter (order no. 8812-2001)
- RS-232 to computer communication module (order no. 8812-2003)

Procedure

1. Download the latest version of the tool to install firmware update files (boot manager) and the currently valid firmware file at ▶ www.samsongroup.com > DOWNLOADS > Software & Drivers > Firmware.
2. Connect the USB/RS-232 adapter to the USB port of the computer.
3. Connect the RS-232 to computer communication module to the USB/RS-232 adapter.
4. Connect the communication module using the supplied RJ45 patch cable to the controller (port at the side).

i Note

The COM port assigned for the USB/RS-232 adapter must only have one digit. If a two-digit number has been assigned to the COM port, change it in the Device Manager in USB Serial Port > Properties > Port settings > Advanced... before starting the boot manager.

5. Start the boot manager and click **Wählen** (select) to select and load the firmware file.
6. Select 'COM-Port' in the **Verbindung** (connection) field.
7. Click **Erweitert** (advanced) button and enter the COM port assigned to the USB/RS-232 adapter.
8. Change the Baud rate to '19200' if it is not set by default.
9. Do not change any other settings. Click **Updaten** (update) button.

The software tool searches for the controller.

⇨ Disconnect the controller from the supply voltage and wait around five seconds before restarting it.

The update runs fully automatically.

During the update, a square between two horizontal lines runs across the controller display. It takes around seven minutes for the green progress bar in the boot manager to reach 100 %.

The message **Update wurde erfolgreich durchgeführt** (update completed) appears. The controller restarts.

⇨ If the update could not be completed properly (e.g. because the connection was interrupted during the update), click **Abbruch** (cancel) button and click **Updaten** (update) button to restart the procedure.

⇨ Contact SAMSON's After-Sales Service if the firmware update cannot be completed successfully.

For this purpose, submit the following information:

- Any error messages that appear
- All the data settings performed according to these instructions
- All the data settings made in the boot manager

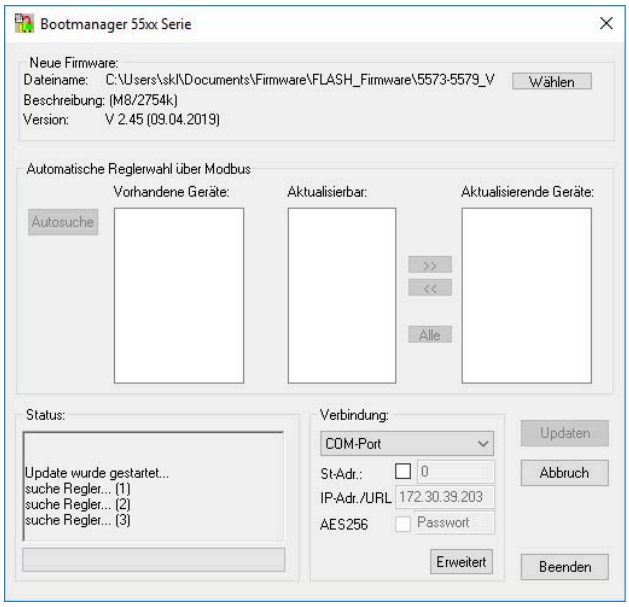

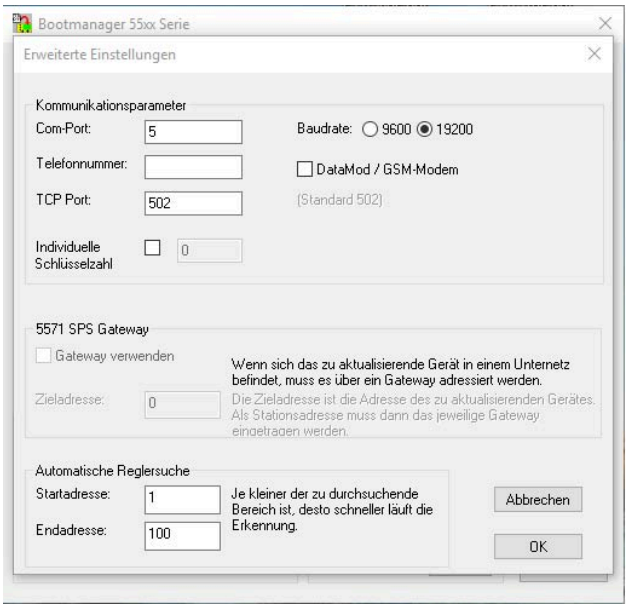

10.2.2 Update over RS-485 bus

Requirements

- Host computer
- Firmware file

1. Download the latest version of the tool to install firmware update files (boot manager) and the currently valid firmware file at ▶ www.samsongroup.com > DOWNLOADS > Software & Drivers > Firmware.
2. Install the boot manager tool on the host computer.
3. Exit the active Modbus application running on the host computer.
4. Start the boot manager and click **Wählen** (select) to select and load the firmware file.
5. Select 'COM-Port' in the **Verbindung** (connection) field.
6. In **Erweitert** (advanced), enter the same COM port and Baud rate as used in the Modbus RTU application.
7. Check **St-Adr.** check box and enter the Modbus station address of the controller that is to be updated in the input field next to the box (Modbus station address = first parameter in **PA6**).
8. Do not change any other settings. Click **Updaten** (update) button.

The update runs fully automatically. It takes around seven minutes for the green progress bar in the boot manager to reach 100 %.

The message **Update wurde erfolgreich durchgeführt** (update completed) appears. The controller restarts.

⇨ If an update could not be completed properly (e.g. because the connection was interrupted during the update), click **Abbruch** (cancel) button, uncheck the 'Stationadressen-Modus' (station address mode) box and click **Updaten** (update) button to restart the procedure.

ℹ *Note*

It is not possible to restart the update process if another controller is connected to the RS-485 bus, which is in the boot mode after a failed update.

⇨ Contact SAMSON's After-Sales Service if the firmware update cannot be completed successfully.

For this purpose, submit the following information:

- Any error messages that appear
- All the data settings performed according to these instructions
- All the data settings made in the boot manager

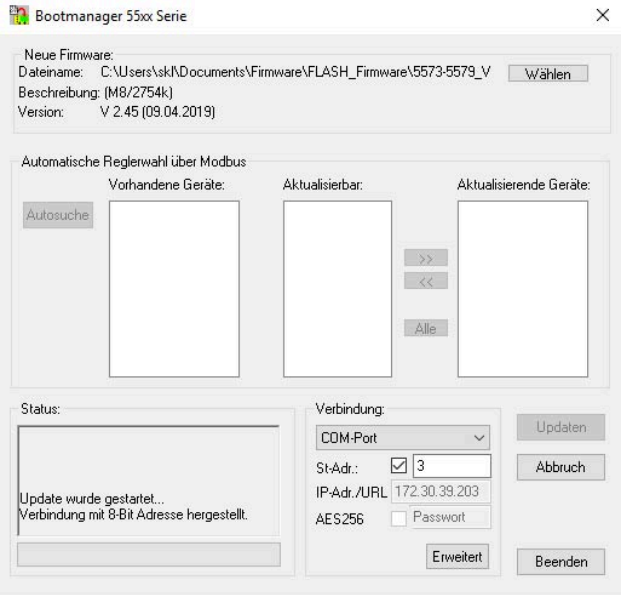
Bootmanager 55xx Serie
Neue Firmware:
Dateiname: C:\Users\skl\Documents\Firmware\FLASH_Firmware\5573-5579_V
Wählen
Beschreibung: (M8/2754k)
Version: V 2.45 (09.04.2019)
Automatische Reglerwahl über Modbus
Vorhandene Geräte:
Aktualisierbar:
Aktualisierende Geräte:
Autosuche
>>
<<
Alle
Status:
Verbindung:
COM-Port
St-Adr.:
3
IP-Adr./URL
172.30.39.203
AES256
Passwort
Erweitert
Updaten
Abbruch
Beenden
Update wurde gestartet...
Verbindung mit 8-Bit Adresse hergestellt.

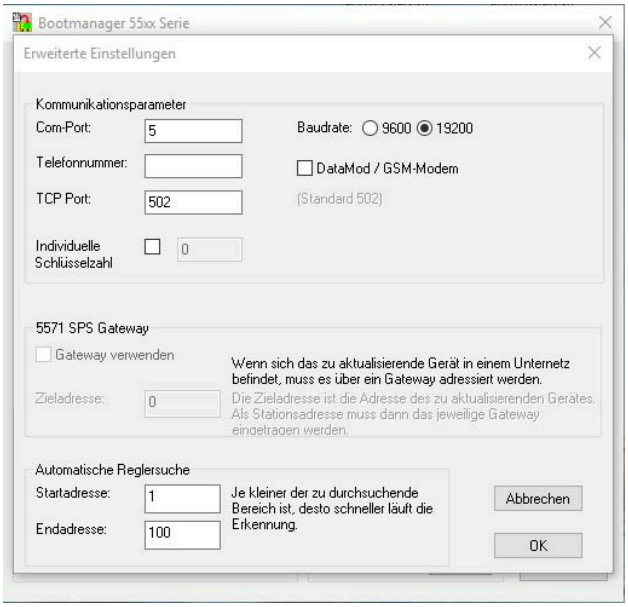
Bootmanager 55xx Serie
Erweiterte Einstellungen
Kommunikationsparameter
Com-Port:
5
Baudrate:
9600
19200
Telefonnummer:
DataMod / GSM-Modem
TCP Port:
502
(Standard 502)
Individuelle Schlüsselzahl
0
5571 SPS Gateway
Gateway verwenden
Wenn sich das zu aktualisierende Gerät in einem Unternetz befindet, muss es über ein Gateway adressiert werden.
Zieladresse:
0
Die Zieladresse ist die Adresse des zu aktualisierenden Gerätes. Als Stationsadresse muss dann das jeweilige Gateway eingetragen werden.
Automatische Reglersuche
Startadresse:
1
Endadresse:
100
Je kleiner der zu durchsuchende Bereich ist, desto schneller läuft die Erkennung.
Abbrechen
OK

10.2.3 Update over Ethernet

Requirements

– Host computer

Procedure

1. Download the latest version of the tool to install firmware update files (boot manager) and the currently valid firmware file at ▶ www.samsongroup.com > DOWNLOADS > Software & Drivers > Firmware.
2. Install the boot manager tool on the host computer.
3. Exit the active Modbus TCP application running on the host computer.
4. Start the boot manager and click **Wählen** (select) to select and load the firmware file.
5. Select 'Modbus-TCP-Gateway' in the **Verbindung** (connection) field.
6. If necessary, click **Erweitert** (advanced) button to change the TCP port (default: 502).

---

i Note

The Baud rate does not need to be changed.

---

1. Check **St-Adr.** check box and enter the Modbus station address of the controller that is to be updated in the input field next to the box (Modbus station address = first parameter in **PA6**).
2. Do not change any other settings. Click **Updaten** (update) button.

The update runs fully automatically.

It takes around seven minutes for the green progress bar in the boot manager to reach 100 %.

The message **Update wurde erfolgreich durchgeführt** (update completed) appears. The controller restarts.

⇨ If an update could not be completed properly (e.g. because the connection was interrupted during the update), click **Abbruch** (cancel) button, uncheck the 'Automatische Reglerwahl über Modbus' (automatic controller selection over Modbus) box and click **Updaten** (update) button to restart the procedure.

---

i Note

It is not possible to restart the update process, if another controller exists in the network, which is in the boot mode after a failed update.

⇨ Contact SAMSON's After-Sales Service if the firmware update cannot be completed successfully.

For this purpose, submit the following information:

– Any error messages that appear
– All the data settings performed according to these instructions
– All the data settings made in the boot manager

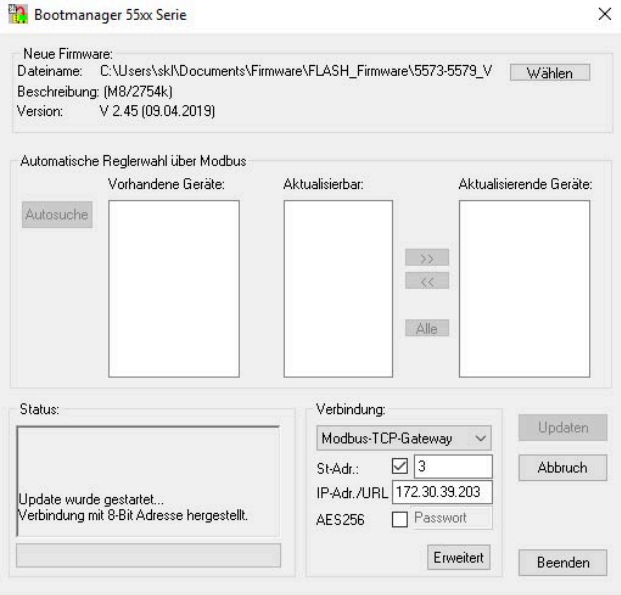

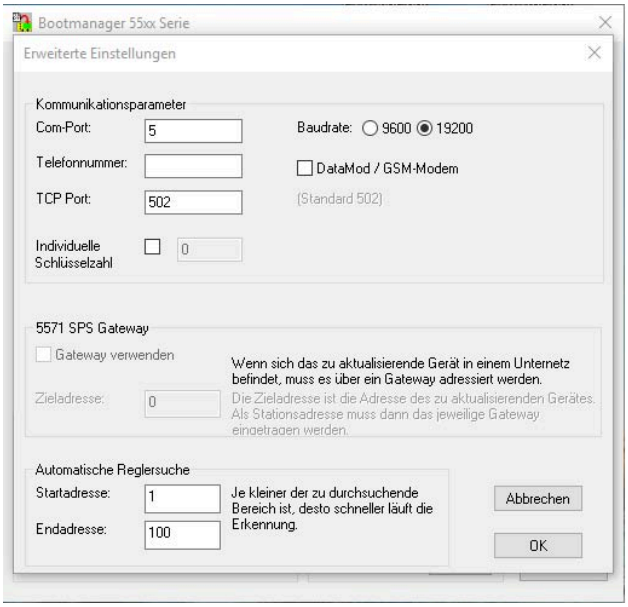

10.2.4 Automatic update for several controllers over RS-485 bus or Ethernet

- Host computer
- Firmware file

1. Download the latest version of the tool to install firmware update files (boot manager) and the currently valid firmware file at ▶ www.samsongroup.com > DOWNLOADS > Software & Drivers > Firmware.
2. Install the boot manager tool on the host computer.
3. Exit the active Modbus application running on the host computer.
4. Start the boot manager and click **Wählen** (select) to select and load the firmware file.
5. RS-485 communication: Select 'COM-Port' in the **Verbindung** (connection) field.

   Ethernet communication: Select 'Modbus-TCP-Gateway' in the **Verbindung** (connection) field.
6. When 'Modbus-TCP-Gateway' is selected: Enter the IP address or URL of the Modbus TCP gateway or SAM HOME gateway in the 'IP-Adr./URL' field.
7. When 'COM-Port' is selected: Click **Erweitert** (advanced) button and enter the same COM port and Baud rate as used in the application.

   When 'Modbus-TCP-Gateway' is selected: Click **Erweitert** (advanced) button and change the TCP port (default: 502), if necessary.

i Note

The Baud rate does not need to be changed when Modbus TCP or a SAM HOME Gateway is used.

Automatic controller search

To optimize the automatic update process of several controllers, the applicable address range can be defined to include the controllers concerned by clicking **Erweitert (advanced) > Automatische Reglersuche** (automatic controller search).

⇨ Click **Autosuche** (auto search) button.

All the devices found by the 'Autosuche' (auto search) are listed under **Vorhandene Geräte** (existing devices). Station address, product number, firmware and hardware versions are shown.

All devices that can be updated are listed under the **Aktualisierbar** (updatable).

⇨ Select the devices to be updated.
- Click **Alle** (all) button.
  All devices that have been found are updated.
  or:
- Select individual devices.

The selected devices are updated.

After the update is completed, all updated controllers are marked **OK**.

⇨ If an update could not be completed properly (e.g. because the connection was interrupted during the update), click **Abbruch** (cancel) button, uncheck the 'Automatische Reglerwahl über Modbus' (automatic controller selection over Modbus) box and click **Updaten** (update) button to restart the procedure.

Note

It is not possible to restart the update process, if another controller exists in the network, which is in the boot mode after a failed update.

⇨ Contact SAMSON's After-Sales Service if the firmware update cannot be completed successfully.

For this purpose, submit the following information:
- Any error messages that appear
- All the data settings performed according to these instructions
- All the data settings made in the boot manager

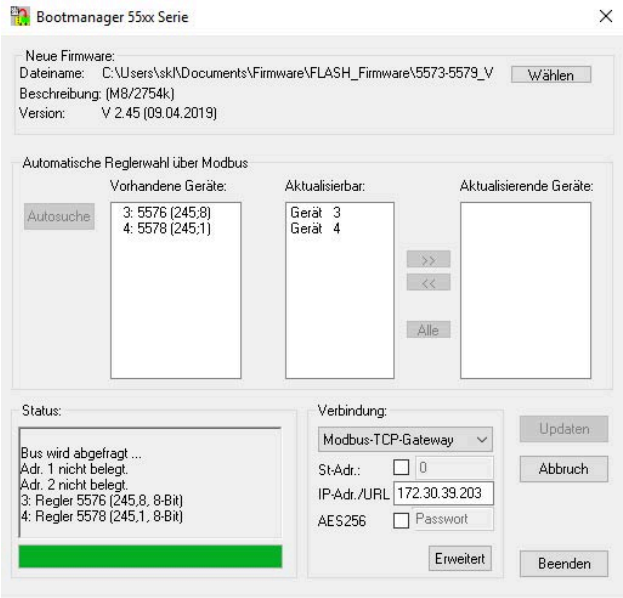

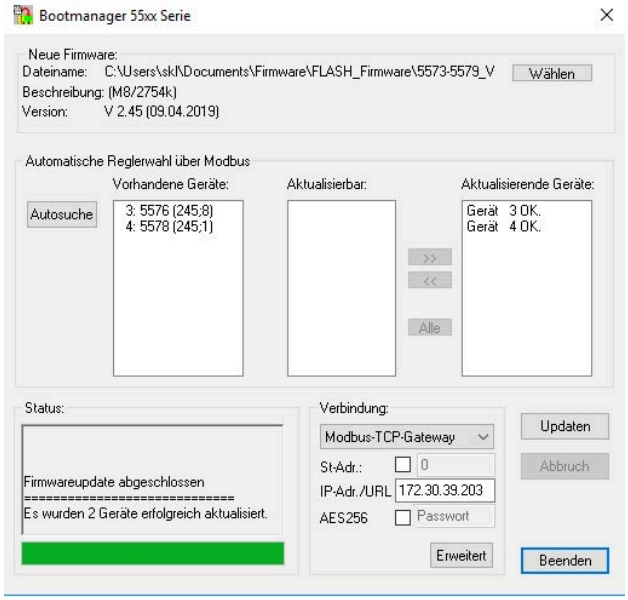

11 Decommissioning

The work described in this chapter is to be performed only by personnel appropriately qualified to carry out such tasks.

⚠ DANGER

Risk of fatal injury due to electric shock.

⇨ *Before disconnecting live wires at the heating controller, switch off the supply voltage and protect it against unintentional reconnection.*

To put the heating controller out of operation, the heating controller must be disconnected from the voltage supply.

⇨ When the heating controller is connected to a control station, log off the heating controller from the control station and disconnect the communication cable.

⇨ When the heating controller is connected to TROVIS-VIEW, remove the connecting cable from the RJ-45 port.

⇨ Disconnect the supply voltage and protect it against unintentional reconnection.

⇨ Open the controller housing. To do so, unscrew the top left and right screws on the front of the controller.

⇨ Disconnect the wires from the terminals.

⇨ Pull the wires out of the cable ducts.

12 Removal

The work described in this chapter is to be performed only by personnel appropriately qualified to carry out such tasks.

Panel mounting

1. Put the heating controller out of operation (see Chapter 11).
2. Unscrew the top left and bottom right screws to unfasten the controller housing from the panel.

Wall mounting

1. Put the heating controller out of operation (see Chapter 11).
2. Unscrew the fastening screws and remove the back of the housing from the wall.

Rail mounting

1. Put the heating controller out of operation (see Chapter 11).
2. Unscrew the top left and bottom right screws to unfasten the controller housing from the top-hat rail.

13 Repair

A defective heating controller must be repaired or replaced.

NOTICE

Risk of damage to the heating controller due to incorrect service or repair work.

⇨ *Do not perform any repair work on your own.*

⇨ *Contact SAMSON's After-sales Service for service and repair work.*

13.1 Returning devices to SAMSON

Defective heating controllers can be returned to SAMSON for repair. Proceed as follows to return devices to SAMSON:

1. Put the heating controller out of operation (see Chapter 11).
2. Remove the heating controller (see Chapter 12).
3. Proceed as described on the Returning goods page of our website (▶ www.samsongroup.com > Service > After-sales Service > Returning goods).

14 Disposal

SAMSON is a producer registered in Europe, agency in charge
▶ www.samsongroup.com > About SAMSON > Environment, Social & Governance > Material Compliance > Waste electrical and electronic equipment (WEEE)
WEEE reg. no.: DE 62194439

Information on substances listed as substances of very high concern (SVHC) on the candidate list of the REACH regulation can be found in the document "Additional Information on Your Inquiry/Order", which is added to the order documents, if applicable. This document includes the SCIP number assigned to the devices concerned. This number can be entered into the database on the European Chemicals Agency (ECHA) website (▶ https://www.echa.europa.eu/scip-database) to find out more information on the SVHC contained in the device.

Note

SAMSON can provide you with a recycling passport on request. Simply e-mail us at aftersalesservice@samsongroup.com giving details of your company address.

Tip

On request, SAMSON can appoint a service provider to dismantle and recycle the product as part of a distributor take-back scheme.

- ⇨ Observe local, national and international refuse regulations.
- ⇨ Do not dispose of components, lubricants and hazardous substances together with your other household waste.

15 Certificates

The following certificate is shown on the next page:

– EU declaration of conformity

The certificate shown was up to date at the time of publishing. The latest certificate can be found on our website at:

▶ www.samsongroup.com > Products > Automation Systems > 5573-1

SMART IN FLOW CONTROL.

SAMSON

EU Konformitätserklärung / EU Declaration of Conformity / Déclaration UE de conformité

Die alleinige Verantwortung für die Ausstellung dieser Konformitätserklärung trägt der Hersteller/
This declaration of conformity is issued under the sole responsibility of the manufacturer/
La présente déclaration de conformité est établie sous la seule responsabilité du fabricant.

Für das folgende Produkt / For the following product / Nous certifions que le produit

Heizungs- und Fernheizungsregler / Heating and District Heating Controller / Régulateur de chauffage et de chauffage à distance
Typ / Type / Type TROVIS 5573-1x

wird die Konformität mit den einschlägigen Harmonisierungsrechtsvorschriften der Union bestätigt / the conformity with the relevant Union harmonisation legislation is declared with/ est conforme à la législation d'harmonisation de l'Union applicable selon les normes:

EMC 2014/30/EU	EN 61000-6-1:2007, EN 61000-6-3:2007 +A1:2011, EN 55022:2010
LVD 2014/35/EU	EN 60730-1:2016, EN60730-2-9:2011, EN 50344-1:2001
RoHS 2011/65/EU	EN 50581:2012

Hersteller / Manufacturer / Fabricant:

SAMSON AKTIENGESELLSCHAFT
Weismüllerstraße 3
D-60314 Frankfurt am Main
Deutschland/Germany/Allemagne

Frankfurt / Francfort, 2017-07-29
Im Namen des Herstellers/ On behalf of the Manufacturer/ Au nom du fabricant.

i.V. Gert Nahler

Gert Nahler
Zentralabteilungsleiter/Head of Department/Chef du département
Entwicklung Automation und Integrationstechnologien/
Development Automation and Integration Technologies

i.v. H. Zager

Hanno Zager
Leiter Qualitätssicherung/Head of Quality Managment/
Responsable de l'assurance de la qualité

ce_5573-1x_de_en_fra_rev07.pdf

16 Appendix A (configuration instructions)

This Appendix contains information on the configuration of the TROVIS 5573-1 Heating and District Heating Controller.

Note

Experimental functions are marked by ✓. SAMSON has intentionally made them available.

However, the use of such functions may lead to unforeseen malfunctions or failure. Any functions and parameters marked by ✓ are not adopted as standard until SAMSON can rule out malfunctions or failure caused by them. You are welcome to report any errors that you discover to SAMSON's After-sales Service by sending an e-mail to aftersalesservice@samsongroup.com.

16.1 Systems

Different hydraulic systems are available. The system images on the display show the structure of the hydraulic system.

Boiler plants

Single-stage boiler systems can be configured to include any system whose heating circuits and DHW circuit include just one heat exchanger.

This applies to the following systems:

1.0-1, 1.5-1, 1.6-1, 1.6-2, 1.9-1, 1.9-2, 2.x, 3.0, 3.5, 4.0, 4.1 and 16.x

The boiler can be controlled by an on/off output (CO1 → F12 - 0).

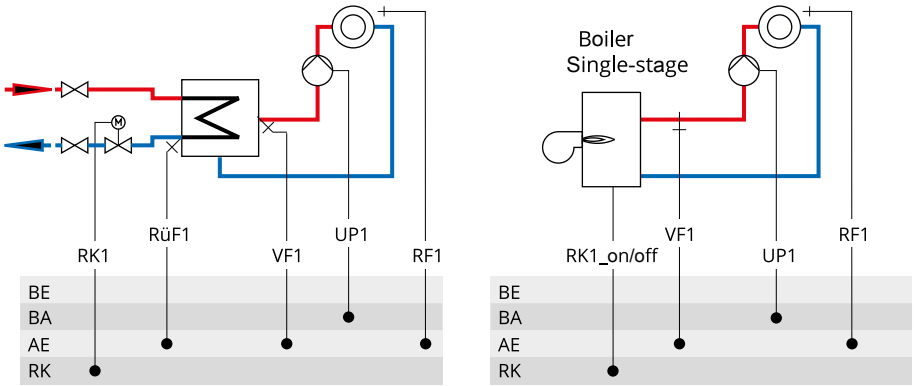

Fig. 11: *Configuration of a boiler system*

System 1.0-1

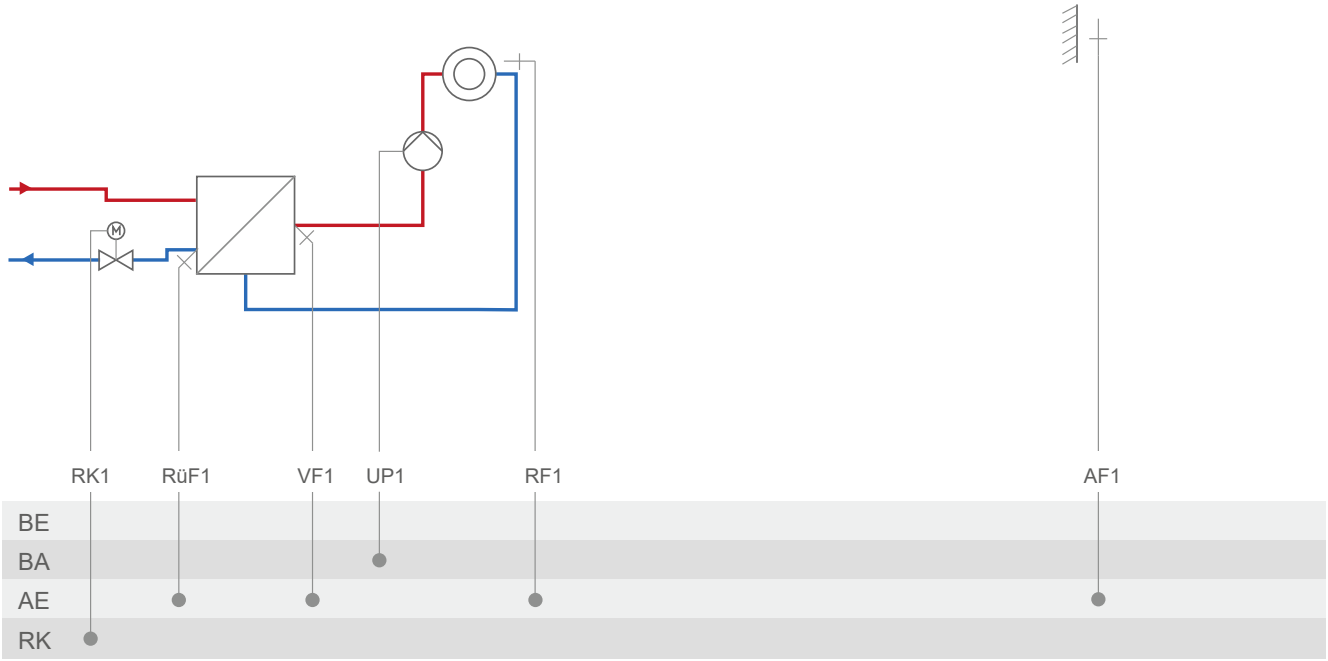

System	1.0-1
	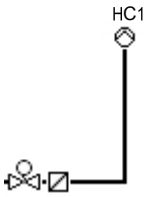
Default setting	
CO1 → F01	- 0 (without RF1)
CO1 → F02	- 1 (with AF1)
CO1 → F03	- 1 (with RüF1)
CO5 → F07	- 0 (without error message at terminal 29)
CO5 → F34	Function of the 0 to 10 V output: – Control signal Y1 (RK1) – Differential temperature control When CO1 → F23 - 1 – External demand When CO1 → F18 - 1 – Outdoor temperature When CO5 → F23 - 1, Direction 'Output'

System 1.0-2

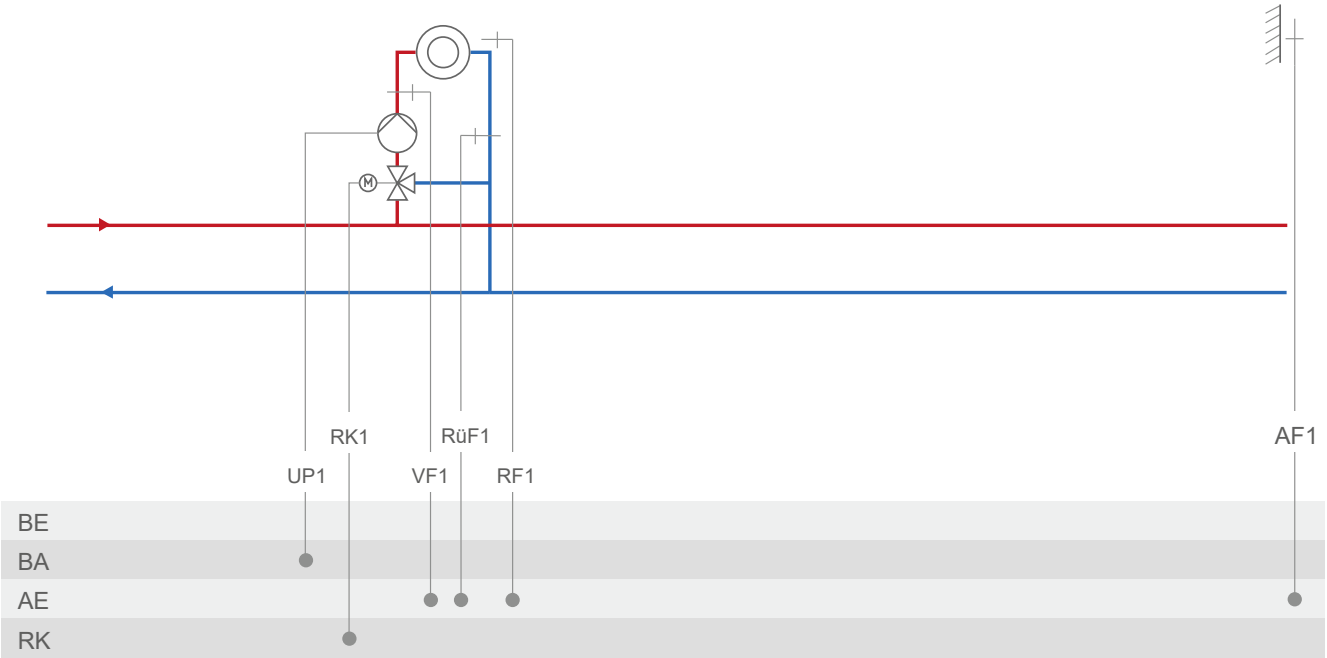

System	1.0-2
	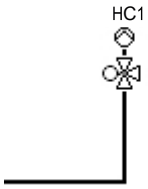
Default setting	
CO1 → F01	- 0 (without RF1)
CO1 → F02	- 1 (with AF1)
CO1 → F03	- 1 (with RüF1)
CO5 → F07	- 0 (without error message at terminal 29)
CO5 → F34	Function of the 0 to 10 V output: – Control signal Y1 (RK1) – Differential temperature control When CO1 → F23 - 1 – External demand When CO1 → F18 - 1 – Outdoor temperature When CO5 → F23 - 1, Direction 'Output'

System 1.1-1

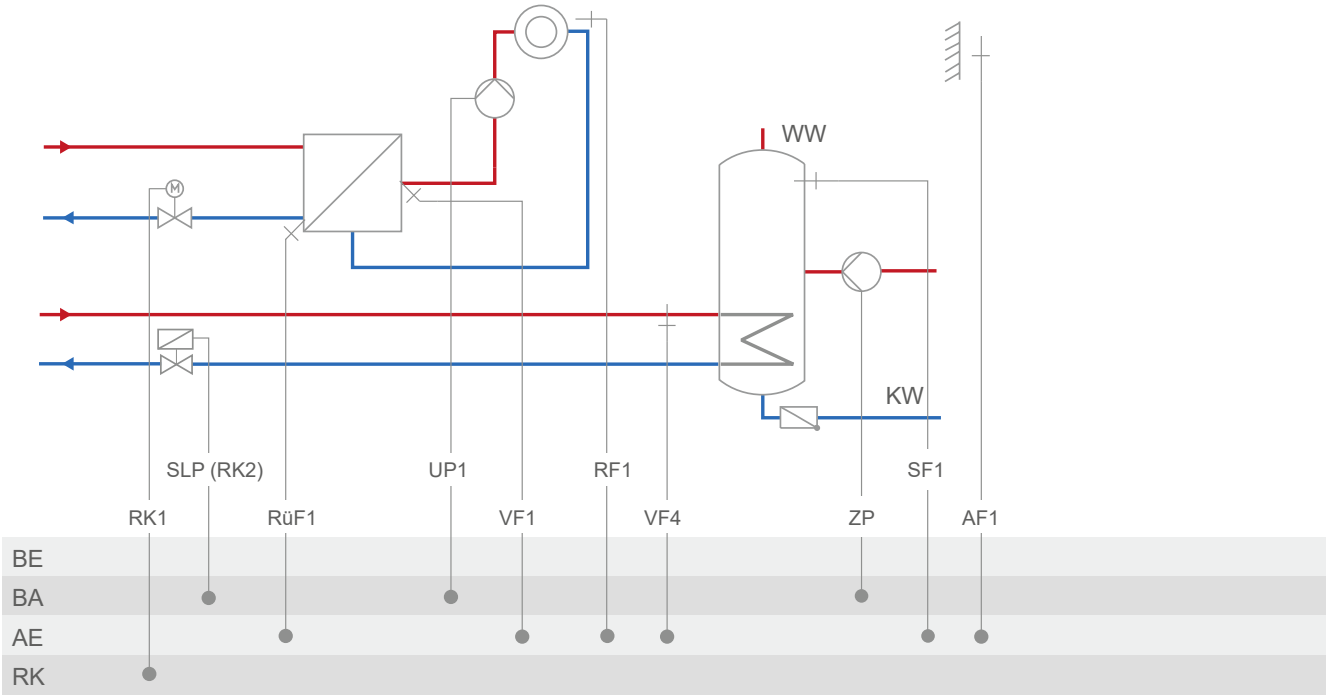

System	1.1-1
	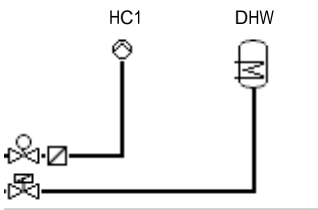
Default setting	
CO1 → F01	- 0 (without RF1)
CO1 → F02	- 1 (with AF1)
CO1 → F03	- 1 (with RüF1)
CO4 → F01	- 1 (with SF1)
CO4 → F02	- 0 (without SF2)
CO4 → F05	- 0 (without VF4)
CO5 → F07	- 0 (without error message at terminal 29)
CO5 → F34	Function of the 0 to 10 V output: – Control signal Y1 (RK1) – External demand — When CO1 → F18 - 1 – SLP speed — When CO4 → F21 - 1 – Outdoor temperature — When CO5 → F23 - 1, Direction 'Output'

System 1.1-2

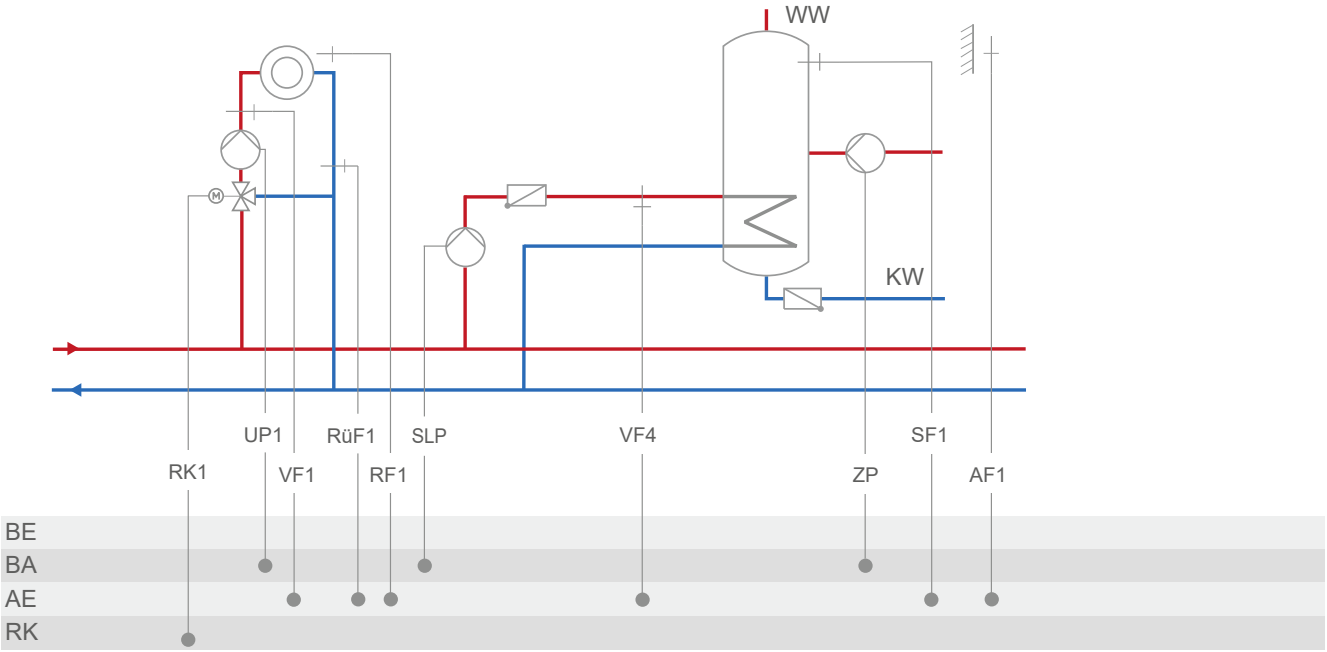

System	1.1-2
	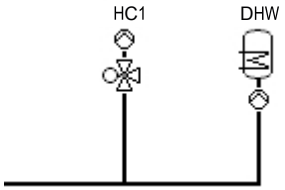
Default setting	
CO1 → F01	- 0 (without RF1)
CO1 → F02	- 1 (with AF1)
CO1 → F03	- 1 (with RüF1)
CO4 → F01	- 1 (with SF1)
CO4 → F02	- 0 (without SF2)
CO4 → F05	- 0 (without VF4)
CO5 → F07	- 0 (without error message at terminal 29)
CO5 → F34	Function of the 0 to 10 V output: – Control signal Y1 (RK1) – External demand — When CO1 → F18 - 1 – SLP speed — When CO4 → F21 - 1 – Outdoor temperature — When CO5 → F23 - 1, Direction 'Output'

System 1.2

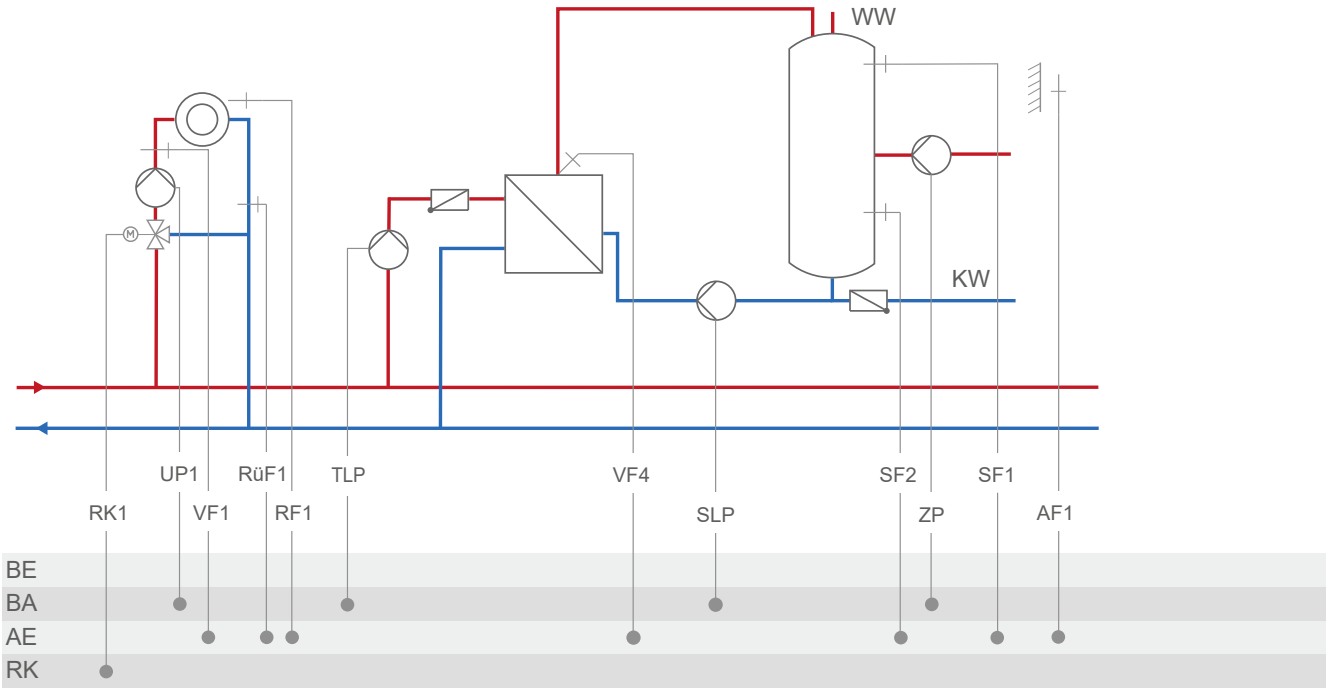

System	1.2
	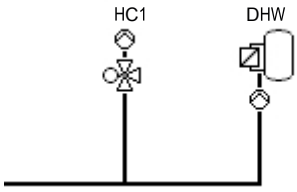
Default setting	
CO1 → F01	- 0 (without RF1)
CO1 → F02	- 1 (with AF1)
CO1 → F03	- 0 (without RüF1)
CO4 → F01	- 1 (with SF1)
CO4 → F02	- 1 (with SF2)
CO4 → F05	- 0 (without VF4)
CO5 → F07	- 0 (without error message at terminal 29)
CO5 → F34	Function of the 0 to 10 V output: – Control signal Y1 (RK1) – External demand — When CO1 → F18 - 1 – SLP speed — When CO4 → F21 - 1 – Outdoor temperature — When CO5 → F23 - 1 Direction 'Output'

System 1.3-1

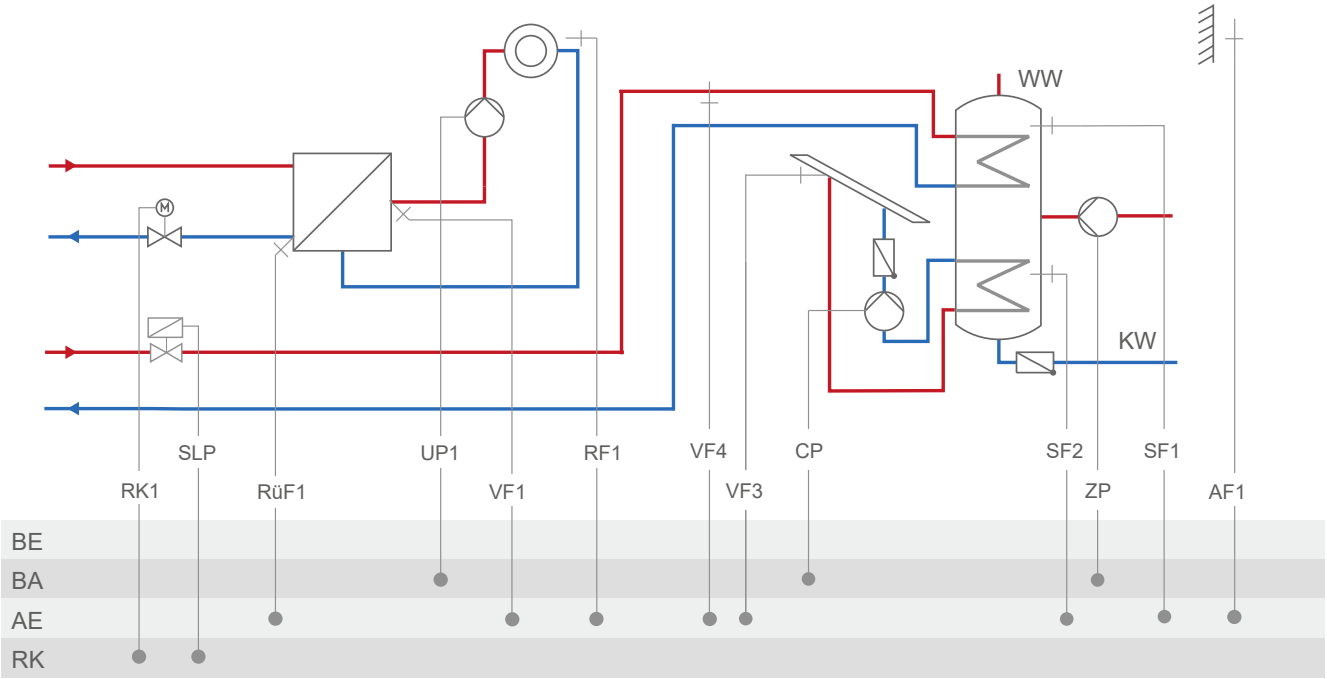

System	1.3-1
	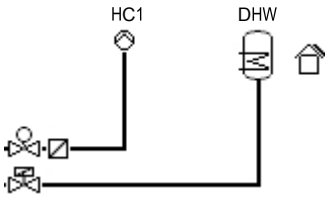
Default setting	
CO1 → F01	- 0 (without RF1)
CO1 → F02	- 1 (with AF1)
CO1 → F03	- 1 (with RüF1)
CO4 → F01	- 1 (with SF1)
CO5 → F07	- 0 (without error message at terminal 29)
CO5 → F34	Function of the 0 to 10 V output: – Control signal Y1 (RK1) – External demand — When CO1 → F18 - 1 – SLP speed — When CO4 → F21 - 1 – Outdoor temperature — When CO5 → F23 - 1 Direction 'Output'

System 1.3-2

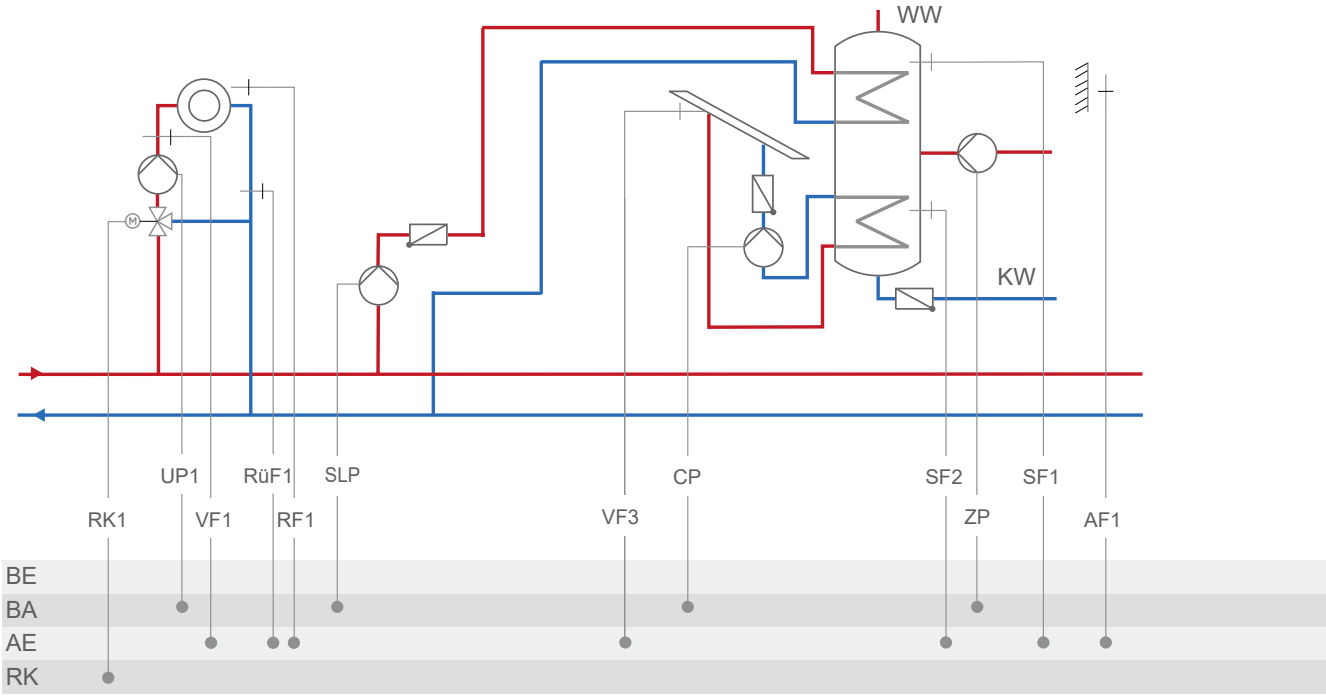

System	1.3-2
	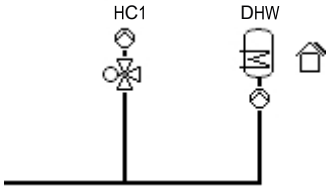
Default setting	
CO1 → F01	- 0 (without RF1)
CO1 → F02	- 1 (with AF1)
CO1 → F03	- 1 (with RüF1)
CO4 → F01	- 1 (with SF1)
CO5 → F07	- 0 (without error message at terminal 29)
CO5 → F34	Function of the 0 to 10 V output: – Control signal Y1 (RK1) – External demand — When CO1 → F18 - 1 – SLP speed — When CO4 → F21 - 1 – Outdoor temperature — When CO5 → F23 - 1 Direction 'Output'

System 1.5-1

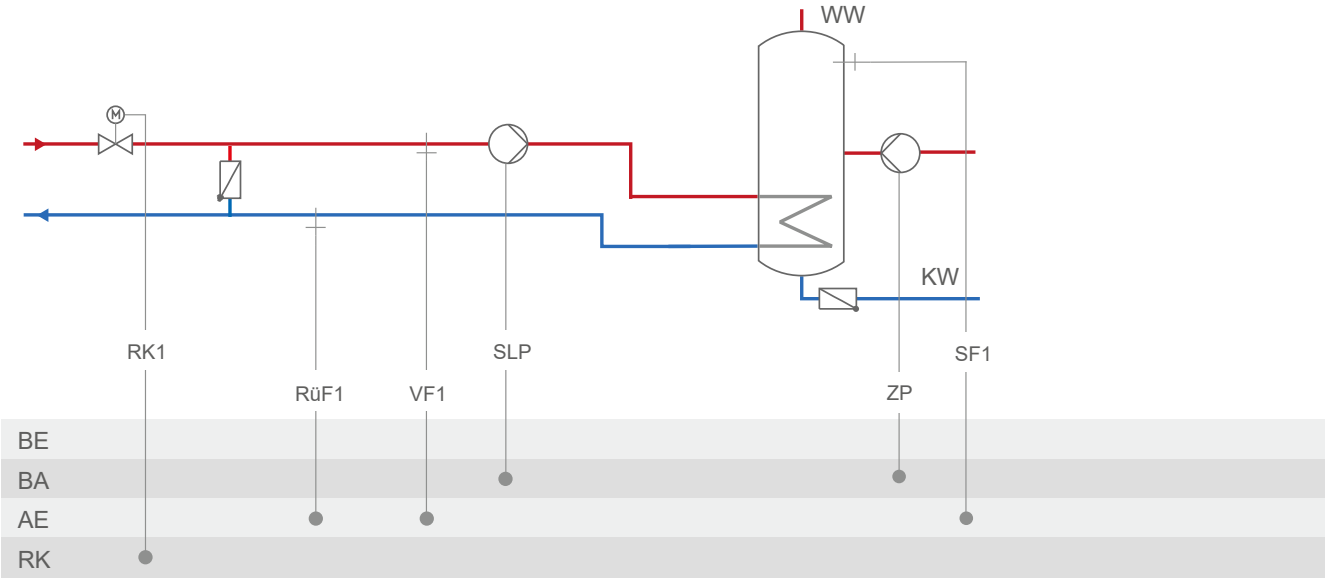

System	1.5-1
	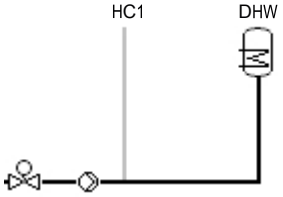
Default setting	
CO1 → F03	- 1 (with RüF1)
CO4 → F01	- 1 (with SF1)
CO4 → F02	- 0 (without SF2)
CO5 → F07	- 0 (without error message at terminal 29)
CO5 → F34	Function of the 0 to 10 V output: – Control signal Y1 (RK1) – External demand When CO1 → F18 - 1 – SLP speed When CO4 → F21 - 1

System 1.5-2

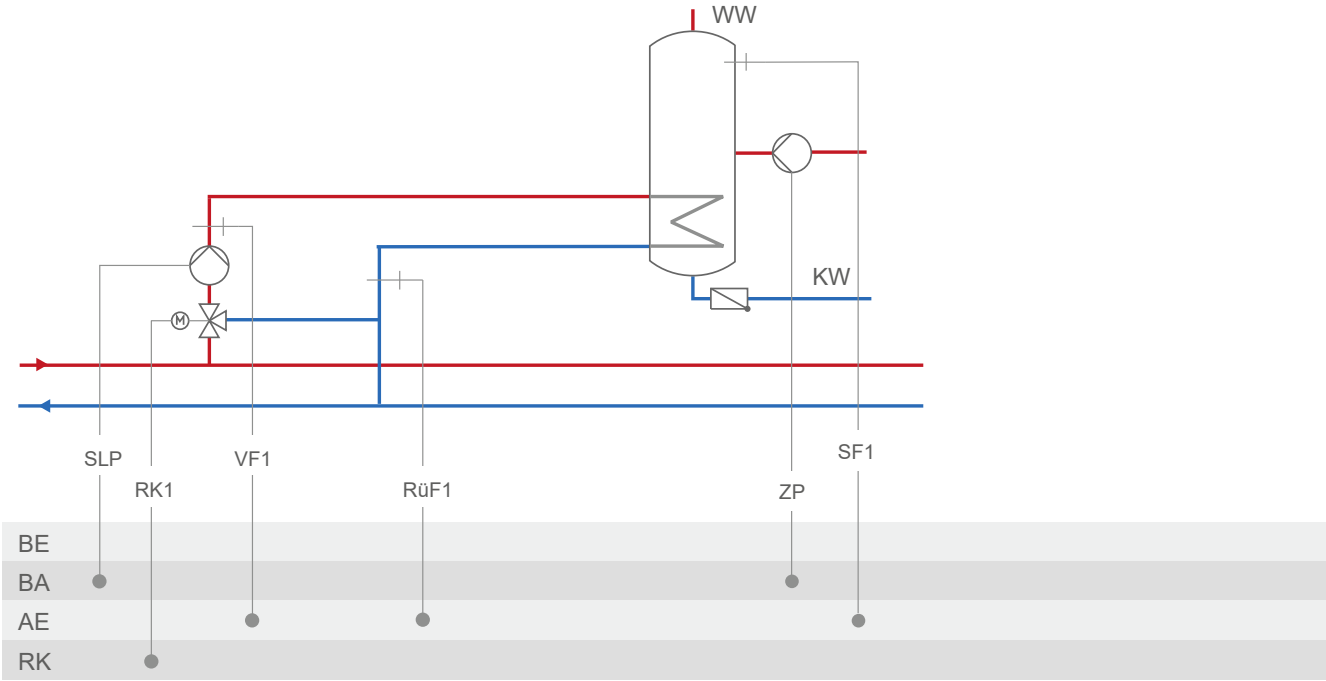

System	1.5-2
	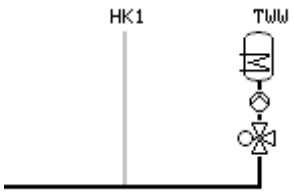
Default setting	
CO1 → F03	- 1 (with RüF1)
CO4 → F01	- 1 (with SF1)
CO4 → F02	- 0 (without SF2)
CO5 → F07	- 0 (without error message at terminal 29)
CO5 → F34	Function of the 0 to 10 V output: – Control signal Y1 (RK1) – External demand When CO1 → F18 - 1 – SLP speed When CO4 → F21 - 1

System 1.6-1

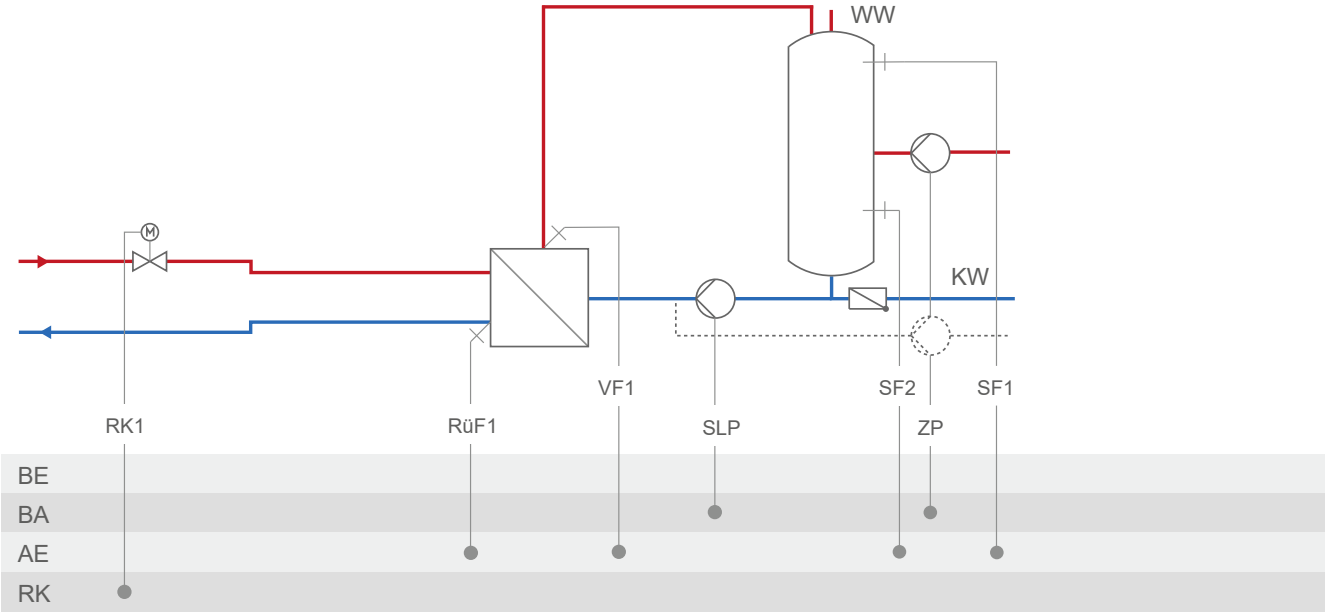

System	1.6-1
	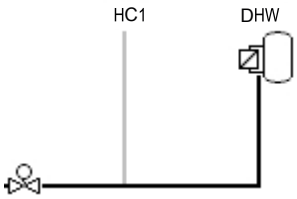
Default setting	
CO1 → F03	- 1 (with RüF1)
CO4 → F01	- 1 (with SF1)
CO4 → F02	- 1 (with SF2)
CO4 → F10	- 0 (DHW circulation return in storage tank)
CO5 → F07	- 0 (without error message at terminal 29)
CO5 → F34	Function of the 0 to 10 V output: – Control signal Y1 (RK1) – External demand When CO1 → F18 - 1 – SLP speed When CO4 → F21 - 1

System 1.6-2

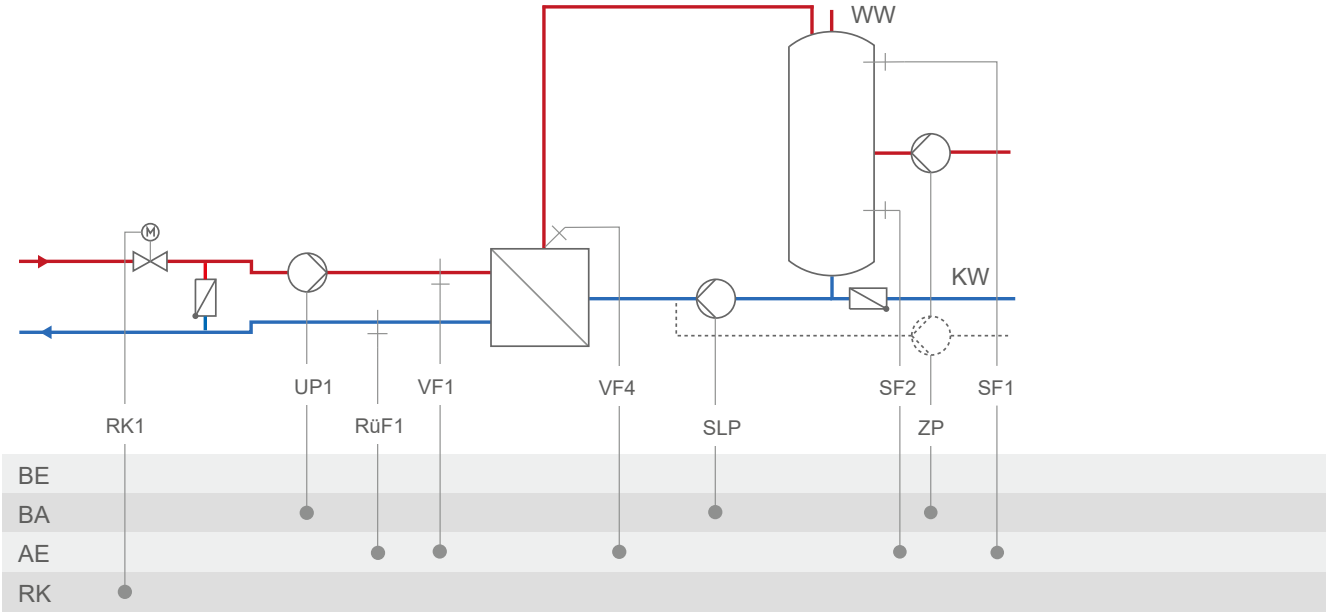

System	1.6-2
	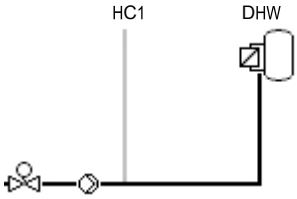
Default setting	
CO1 → F03	- 1 (with RüF1)
CO4 → F01	- 1 (with SF1)
CO4 → F02	- 1 (with SF2)
CO4 → F05	- 0 (without VF4; in this case, VF1 usually installed at the point of measurement of VF4)
CO4 → F10	- 0 (DHW circulation return in storage tank)
CO5 → F07	- 0 (without error message at terminal 29)
CO5 → F34	Function of the 0 to 10 V output: – Control signal Y1 (RK1) – External demand When CO1 → F18 - 1 – SLP speed When CO4 → F21 - 1

System 1.6-3

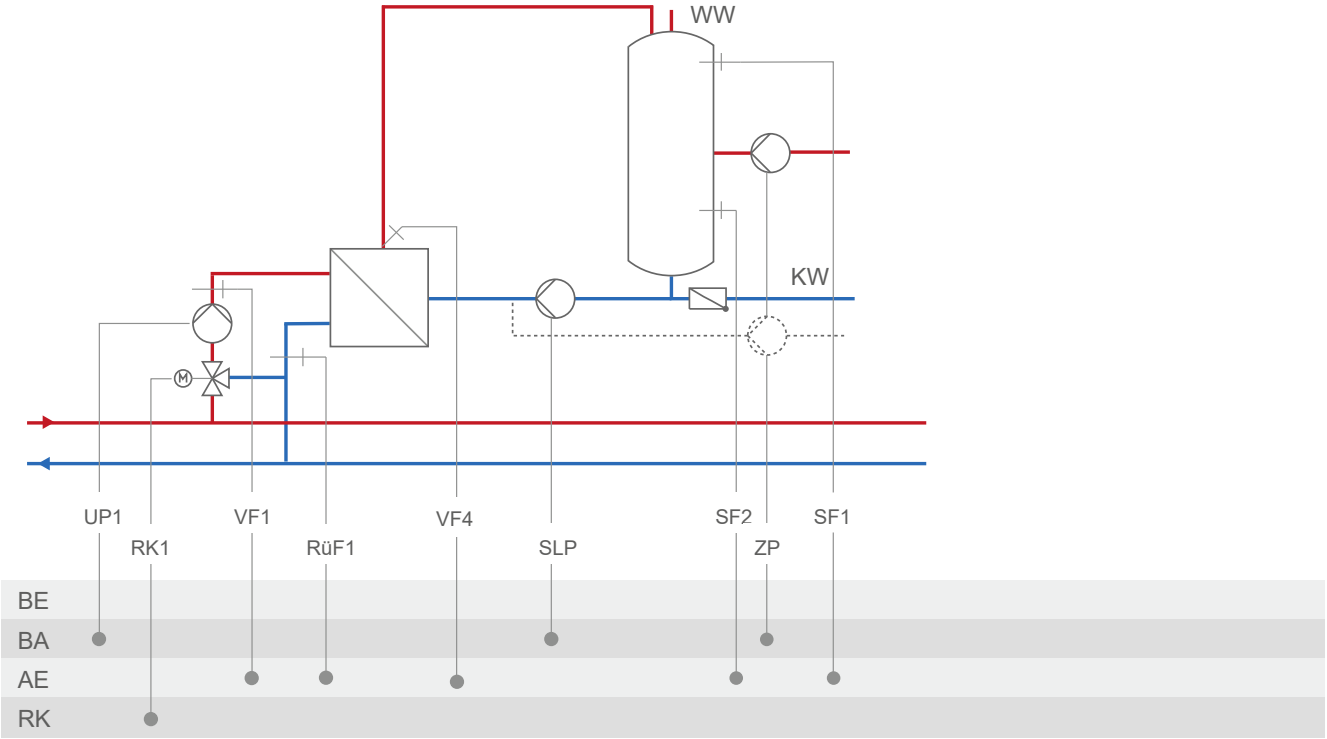

System	1.6-3
	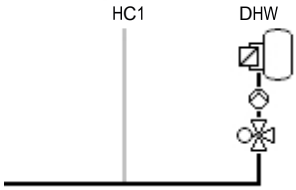
Default setting	
CO1 → F03	- 1 (with RüF1)
CO4 → F01	- 1 (with SF1)
CO4 → F02	- 1 (with SF2)
CO4 → F05	- 0 (without VF4; in this case, VF1 usually installed at the point of measurement of VF4)
CO4 → F10	- 0 (DHW circulation return in storage tank)
CO5 → F07	- 0 (without error message at terminal 29)
CO5 → F34	Function of the 0 to 10 V output: – Control signal Y1 (RK1) – External demand When CO1 → F18 - 1 – SLP speed When CO4 → F21 - 1

System 1.9

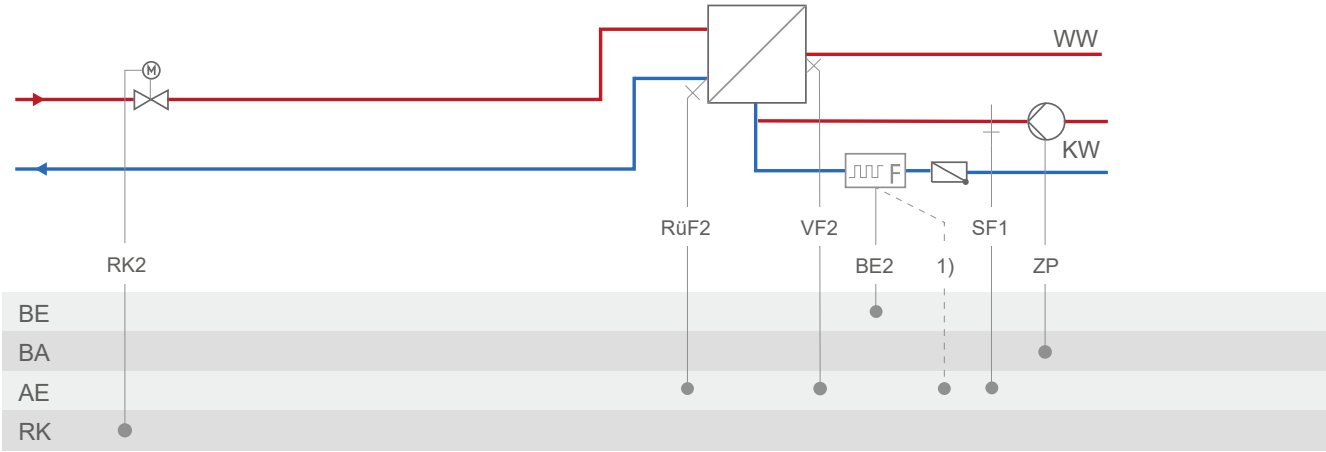

System	1.9
	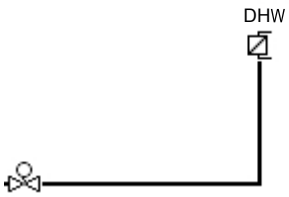
Default setting	
CO4 → F01	- 0 (without SF1)
CO4 → F03	- 0 (without RüF2)
CO5 → F07	- 0 (without error message at terminal 23)
CO5 → F34	Function of the 0 to 10 V output: – Control signal Y2 (RK2) – 10 V supply – External demand When CO1 → F18 - 1

System 2.0

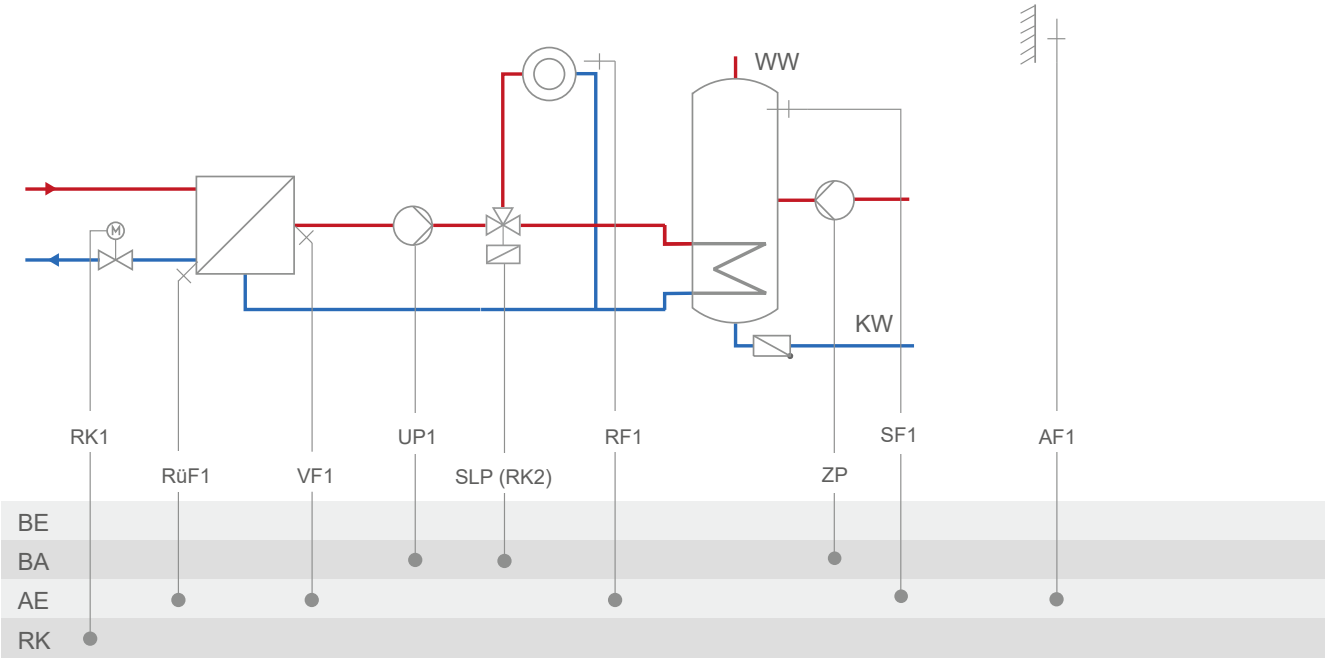

System	2.0
	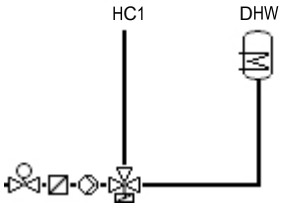
Default setting	
CO1 → F01	- 0 (without RF1)
CO1 → F02	- 1 (with AF1)
CO1 → F03	- 1 (with RüF1)
CO4 → F01	- 1 (with SF1)
CO4 → F02	- 0 (without SF2)
CO5 → F07	- 0 (without error message at terminal 29)
CO5 → F34	Function of the 0 to 10 V output: – Control signal Y1 (RK1) – External demand — When CO1 → F18 - 1 – Outdoor temperature — When CO5 → F23 - 1 Direction 'Output'

System 2.1

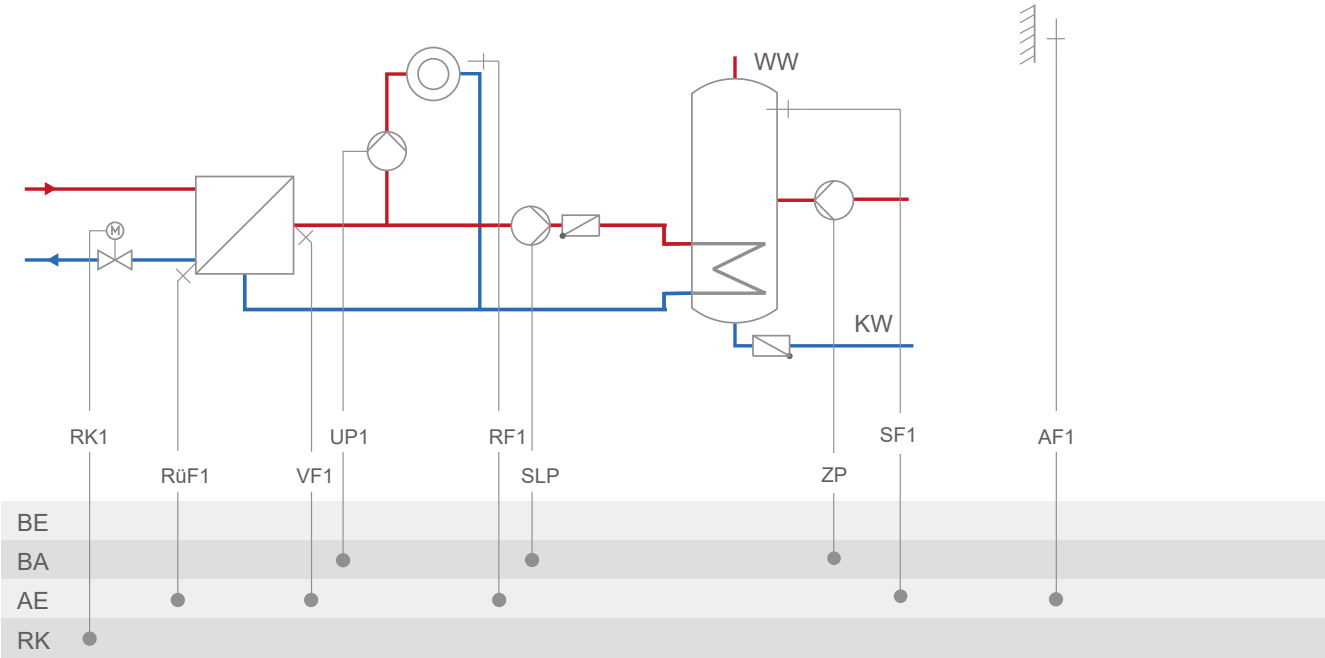

System	2.1
	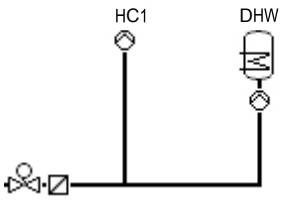
Default setting	
CO1 → F01	- 0 (without RF1)
CO1 → F02	- 1 (with AF1)
CO1 → F03	- 1 (with RüF1)
CO4 → F01	- 1 (with SF1)
CO4 → F02	- 0 (without SF2)
CO5 → F07	- 0 (without error message at terminal 29)
CO5 → F34	Function of the 0 to 10 V output: – Control signal Y1 (RK1) – External demand — When CO1 → F18 - 1 – SLP speed — When CO4 → F21 - 1 – Outdoor temperature — When CO5 → F23 - 1 Direction 'Output'

System 2.2

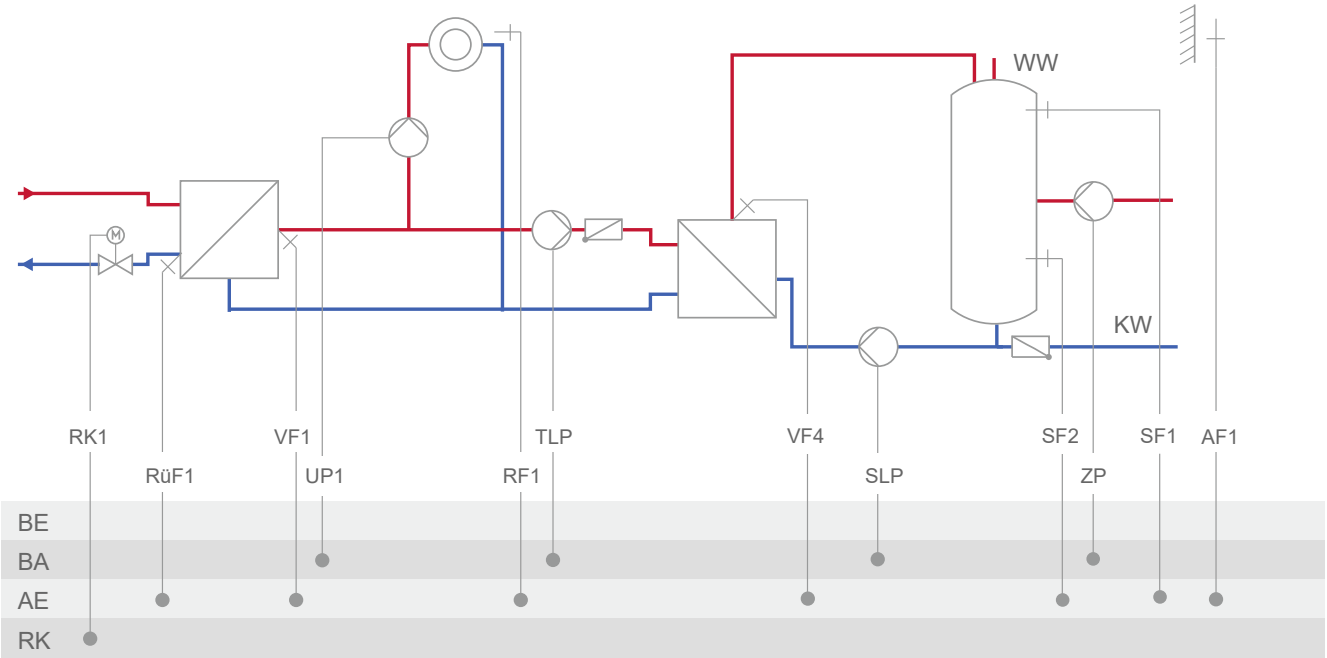

System	2.2
	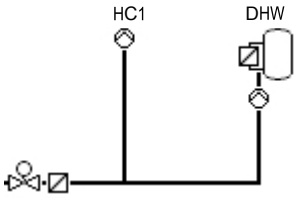
Default setting	
CO1 → F01	- 0 (without RF1)
CO1 → F02	- 1 (with AF1)
CO1 → F03	- 1 (with RüF1)
CO4 → F01	- 1 (with SF1)
CO4 → F02	- 1 (with SF2)
CO4 → F05	- 0 (without VF4)
CO5 → F07	- 0 (without error message at terminal 29)
CO5 → F34	Function of the 0 to 10 V output: – Control signal Y1 (RK1) – External demand — When CO1 → F18 - 1 – SLP speed — When CO4 → F21 - 1 – Outdoor temperature — When CO5 → F23 - 1 Direction 'Output'

System 2.3

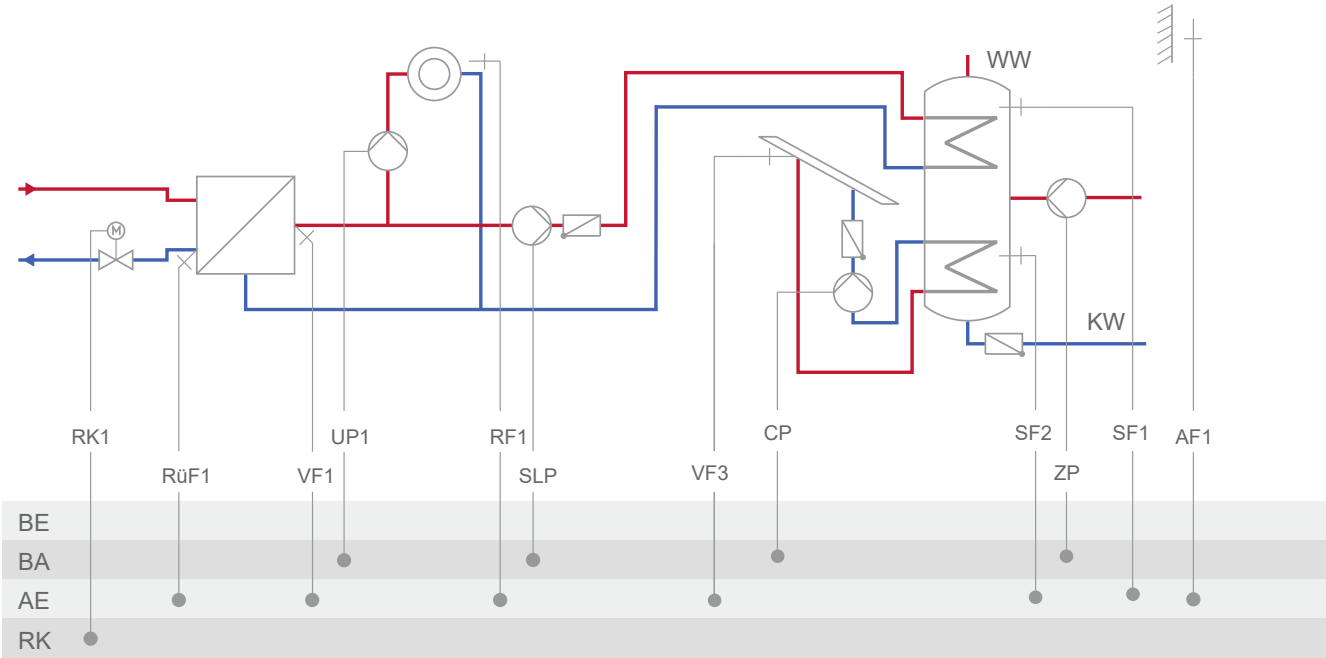

System	2.3
	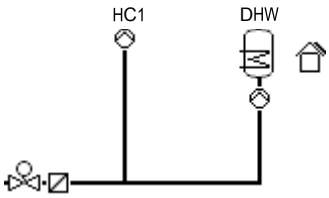
Default setting	
CO1 → F01	- 0 (without RF1)
CO1 → F02	- 1 (with AF1)
CO1 → F03	- 1 (with RüF1)
CO4 → F01	- 1 (with SF1)
CO5 → F07	- 0 (without error message at terminal 29)
CO5 → F34	Function of the 0 to 10 V output: – Control signal Y1 (RK1) – External demand — When CO1 → F18 - 1 – SLP speed — When CO4 → F21 - 1 – Outdoor temperature — When CO5 → F23 - 1 Direction 'Output'

System 3.0

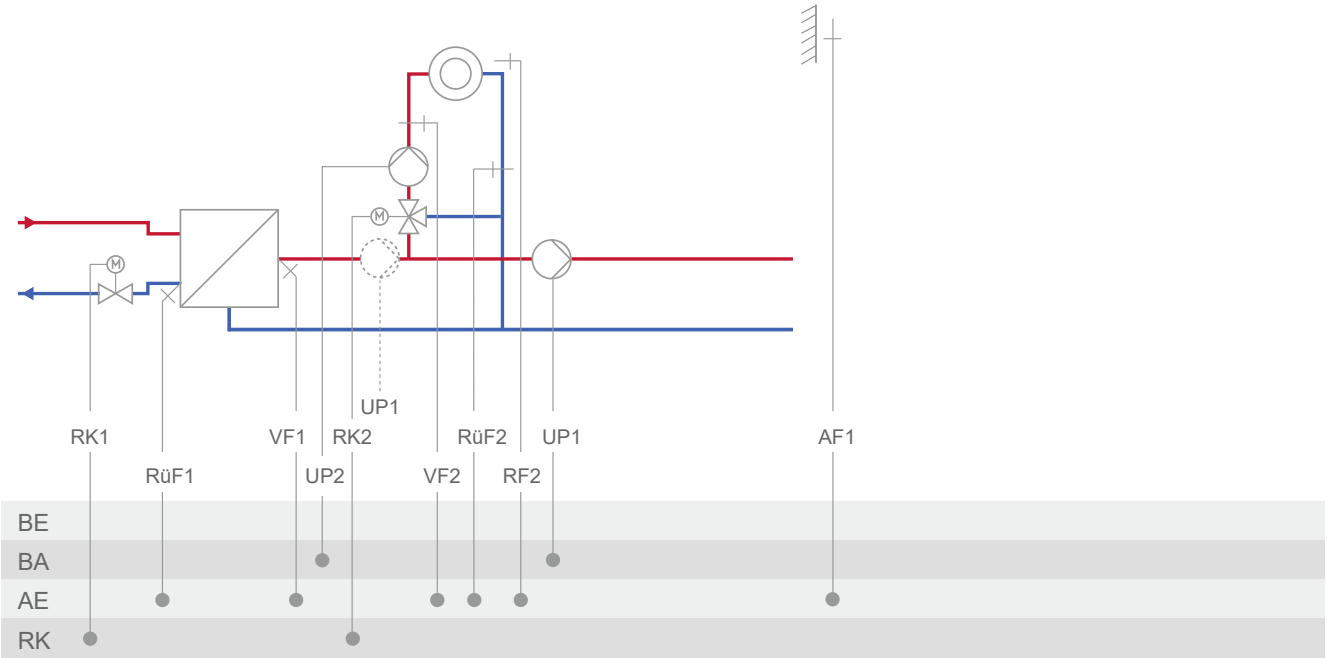

System	3.0
	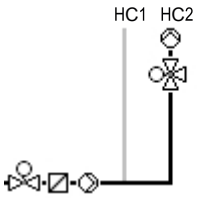
Default setting	
CO1 → F02	- 1 (with AF1)
CO1 → F03	- 1 (with RüF1)
CO2 → F01	- 0 (without RF2)
CO2 → F02	- 1 (with AF1)
CO2 → F03	- 0 (without RüF2)
CO5 → F07	- 0 (without error message at terminal 23)
CO5 → F14	- 0 (UP1 only active during the processing for an external demand)
CO5 → F34	Function of the 0 to 10 V output: – Control signal Y1 (RK1) – Control signal Y2 (RK2) – External demand — When CO1 → F18 - 1 – Outdoor temperature — When CO5 → F23 - 1 Direction 'Output'

System 3.5

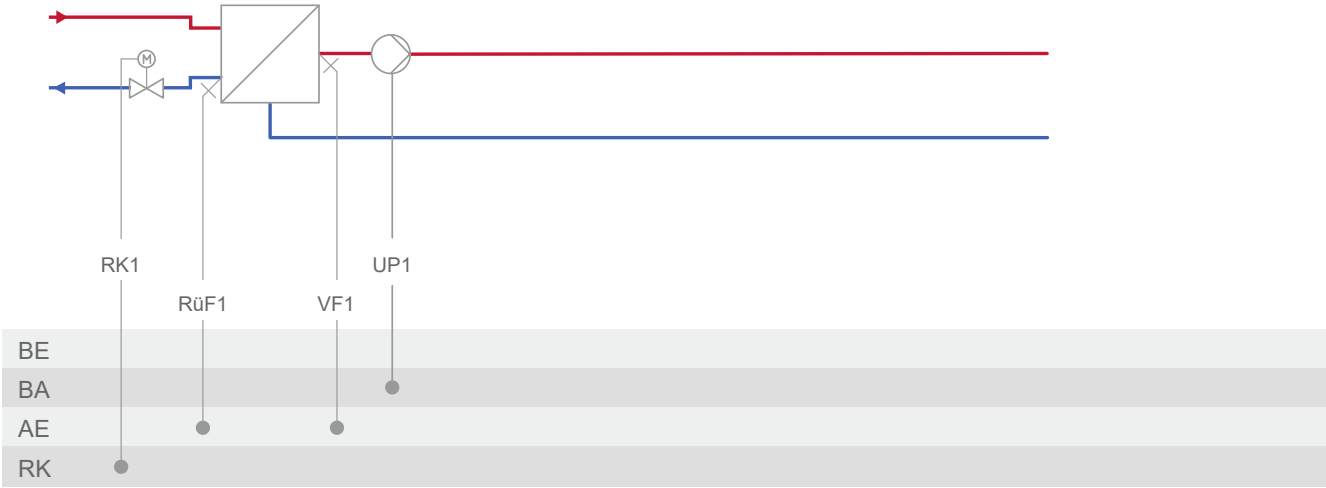

System	3.5
	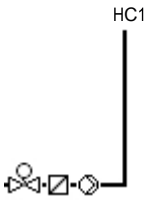
Note:	Control operation and UP1 only active during the processing for an external demand.
Default setting	
CO1 → F03	- 1 (with RüF1)
CO5 → F07	- 0 (without error message at terminal 29)
CO5 → F34	Function of the 0 to 10 V output: – Control signal Y1 (RK1) – External demand When CO1 → F18 - 1

System 4.0

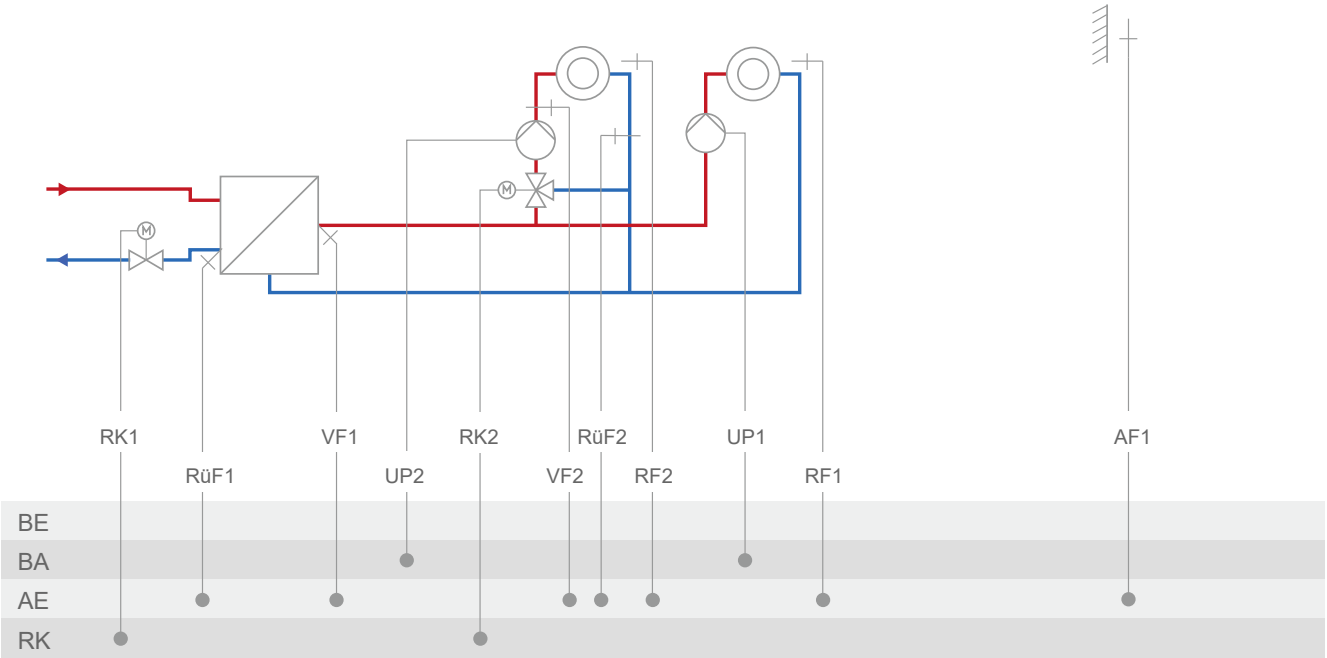

System	4.0
	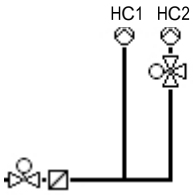
Default setting	
CO1 → F01	- 0 (without RF1)
CO1 → F02	- 1 (with AF1)
CO1 → F03	- 1 (with RüF1)
CO2 → F01	- 0 (without RF2)
CO2 → F02	- 0 (without AF1)
CO2 → F03	- 0 (without RüF2)
CO5 → F07	- 0 (without error message at terminal 23)
CO5 → F34	Function of the 0 to 10 V output: – Control signal Y1 (RK1) – Control signal Y2 (RK2) – External demand — When CO1 → F18 - 1 – Outdoor temperature — When CO5 → F23 - 1 Direction 'Output'

System 4.1

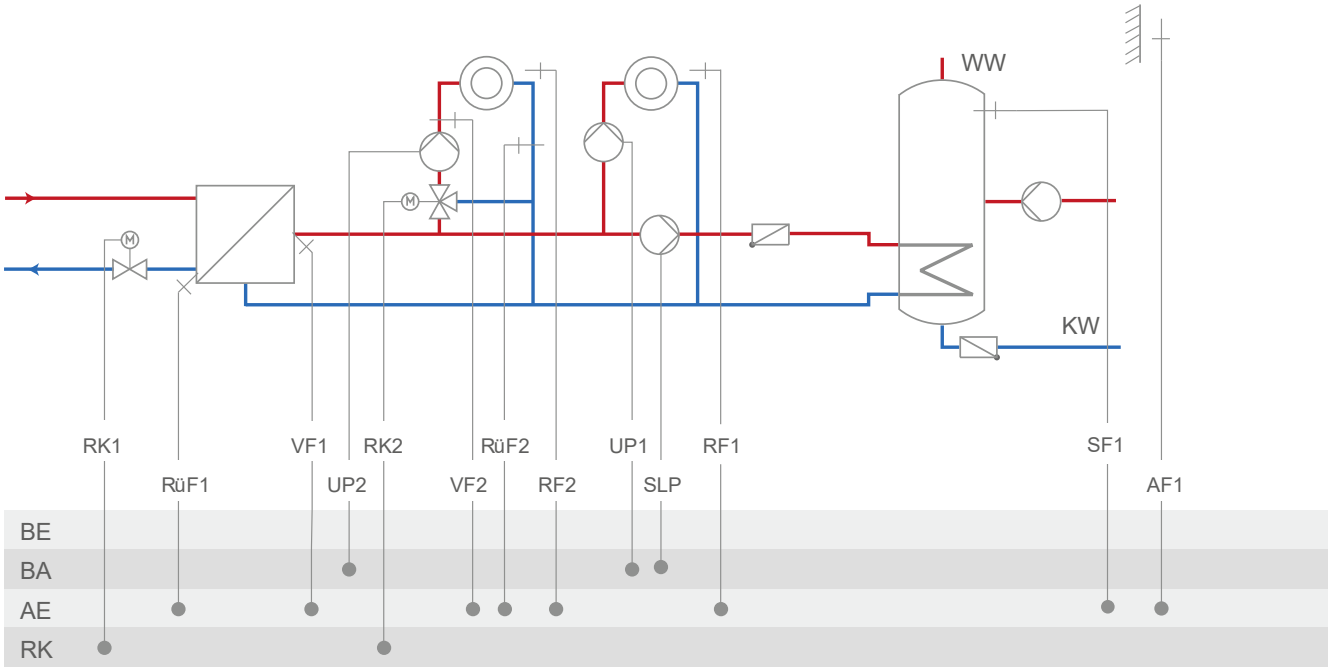

System	4.1
	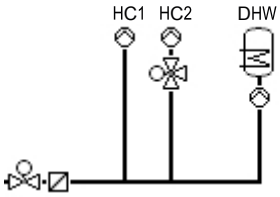
Default setting	
CO1 → F01	- 0 (without RF1)
CO1 → F02	- 1 (with AF1)
CO1 → F03	- 1 (with RüF1)
CO2 → F01	- 0 (without RF2)
CO2 → F02	- 1 (with AF1)
CO2 → F03	- 0 (without RüF2)
CO4 → F01	- 1 (with SF1)
CO4 → F02	- 0 (without SF2)
CO5 → F34	Function of the 0 to 10 V output: – Control signal Y1 (RK1) – Control signal Y2 (RK2) – External demand — When CO1 → F18 - 1 – SLP speed — When CO4 → F21 - 1 – Outdoor temperature — When CO5 → F23 - 1 Direction 'Output'

System 4.5

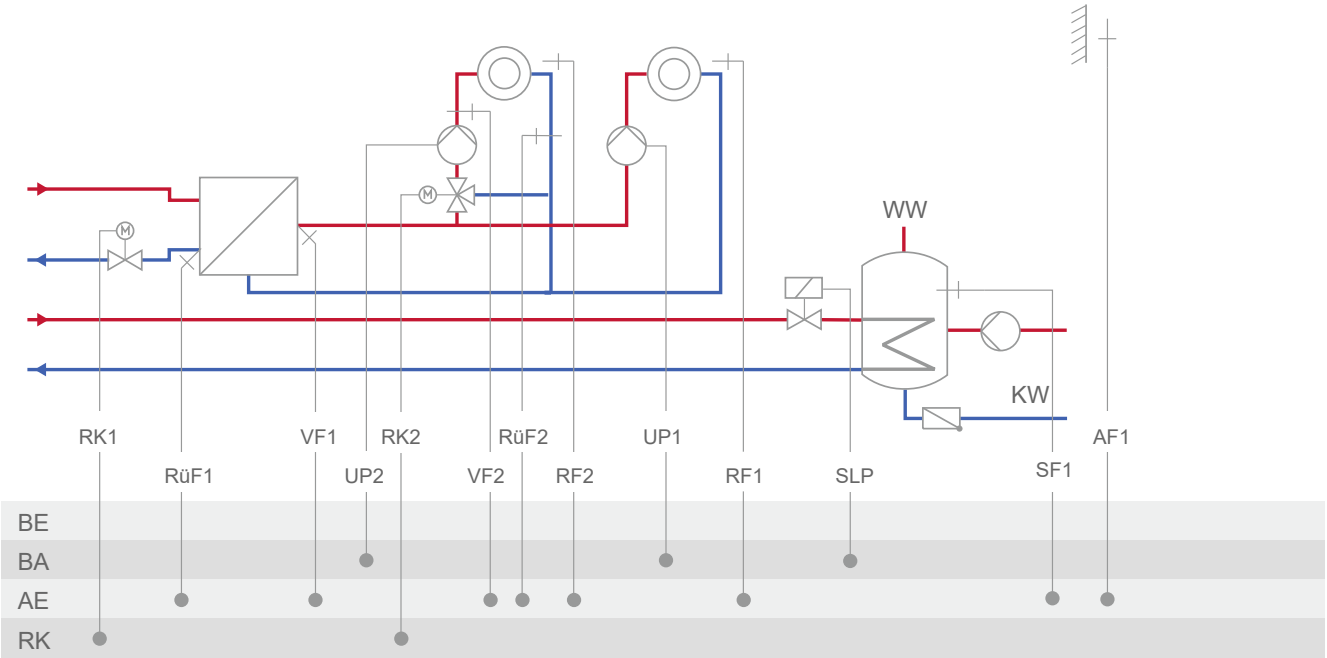

System	4.5
	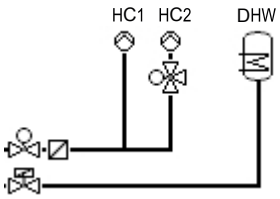
Default setting	
CO1 → F01	- 0 (without RF1)
CO1 → F02	- 1 (with AF1)
CO1 → F03	- 1 (with RüF1)
CO2 → F01	- 0 (without RF2)
CO2 → F02	- 1 (with AF1)
CO2 → F03	- 0 (without RüF2)
CO4 → F01	- 1 (with SF1)
CO4 → F02	- 0 (without SF2)
CO5 → F34	Function of the 0 to 10 V output: – Control signal Y1 (RK1) – Control signal Y2 (RK2) – External demand — When CO1 → F18 - 1 – Outdoor temperature — When CO5 → F23 - 1 Direction 'Output'

System 10.0-1

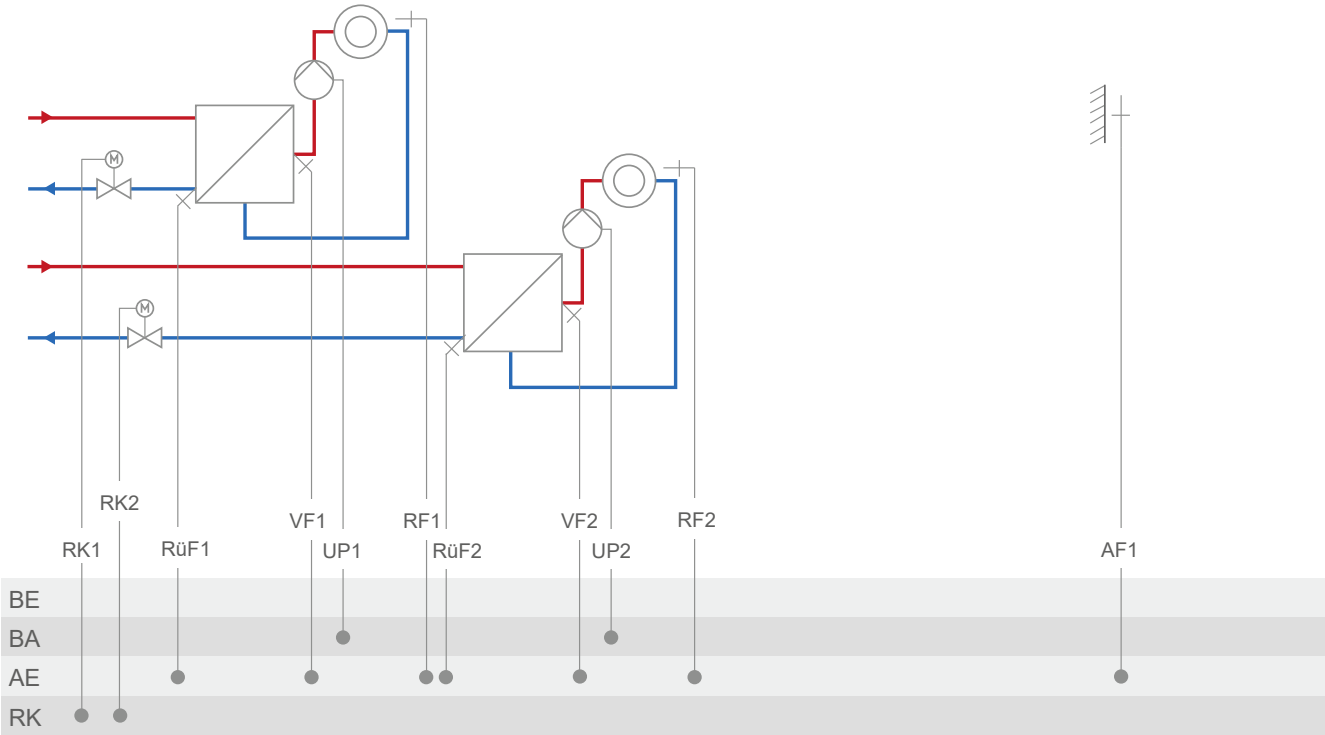

System	10.0-1
	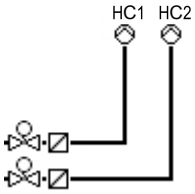
Default setting	
CO1 → F01	- 0 (without RF1)
CO1 → F02	- 1 (with AF1)
CO1 → F03	- 1 (with RüF1)
CO2 → F01	- 0 (without RF2)
CO2 → F02	- 1 (with AF1)
CO2 → F03	- 1 (with RüF2)
CO5 → F07	- 0 (without error message at terminal 23)
CO5 → F34	Function of the 0 to 10 V output: – Control signal Y1 (RK1) – Control signal Y2 (RK2) – External demand — When CO1 → F18 - 1 – Outdoor temperature — When CO5 → F23 - 1 Direction 'Output'

System 10.0-2

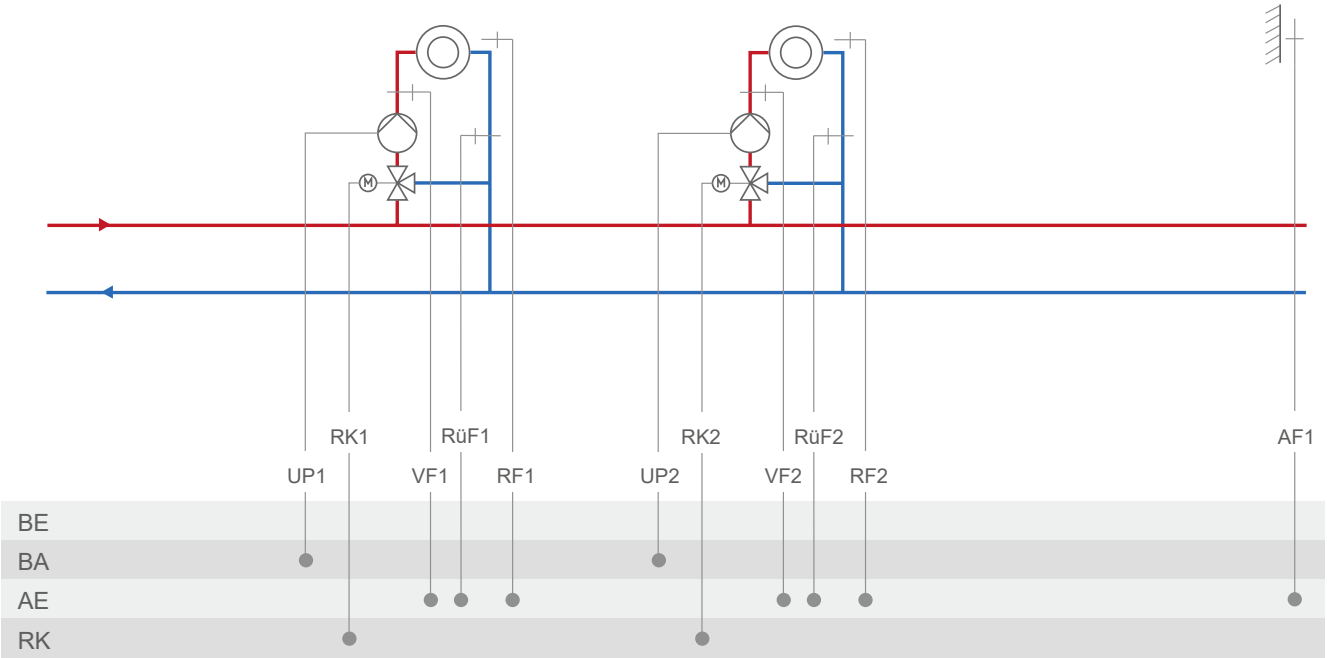

System	10.0-2
	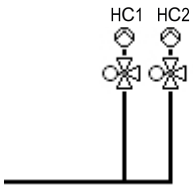
RK2: CO2 → F02 - 0 = Fixed set point control; CO2 → F02 - 1, select AF1 = Outdoor-temperature-compensated control with AF1; CO2→ F02 - 1, select AF2 = Outdoor-temperature-compensated control with AF2	
Default setting	
CO1 → F01	- 0 (without RF1)
CO1 → F02	- 1 (with AF1)
CO1 → F03	- 1 (with RüF1)
CO2 → F01	- 0 (without RF2)
CO2 → F02	- 1 (with AF1)
CO2 → F03	- 1 (with RüF2)
CO5 → F07	- 0 (without error message at terminal 23)
CO5 → F34	Function of the 0 to 10 V output: – Control signal Y1 (RK1) – Control signal Y2 (RK2) – External demand — When CO1 → F18 - 1 – Outdoor temperature — When CO5 → F23 - 1 Direction 'Output'

System 11.0

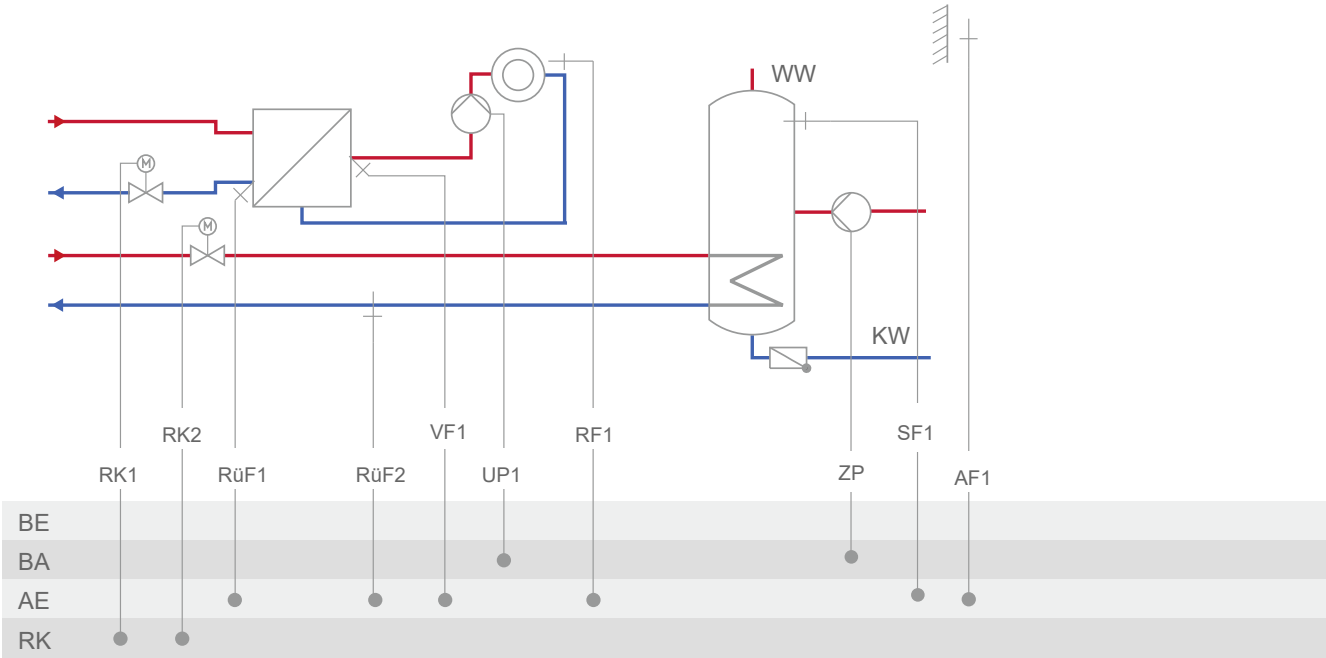

System	11.0
	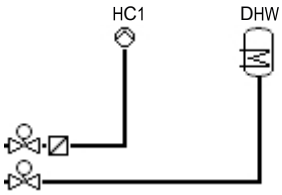
Default setting	
CO1 → F01	- 0 (without RF1)
CO1 → F02	- 1 (with AF1)
CO1 → F03	- 1 (with RüF1)
CO4 → F03	- 0 (without RüF2)
CO5 → F07	- 0 (without error message at terminal 23)
CO5 → F34	Function of the 0 to 10 V output: – Control signal Y1 (RK1) – Control signal Y2 (RK2) – External demand — When CO1 → F18 - 1 – Outdoor temperature — When CO5 → F23 - 1 Direction 'Output'

System 11.1-1

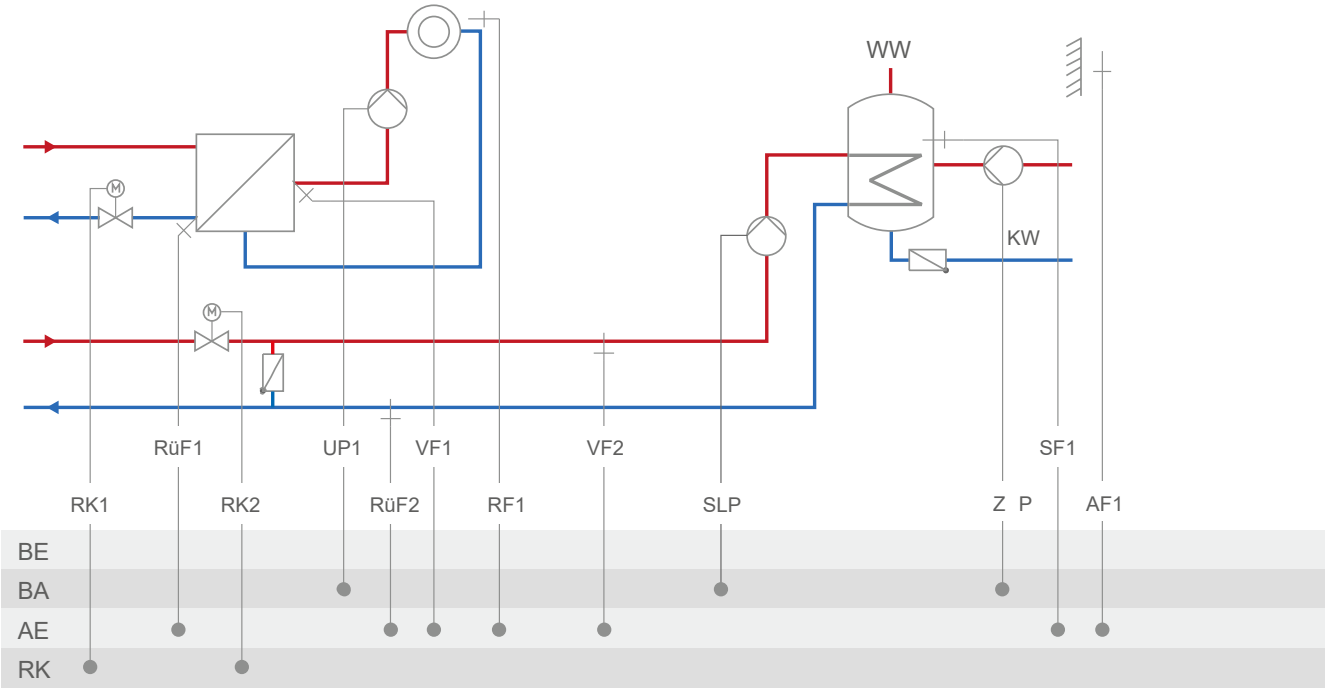

System	11.1-1
	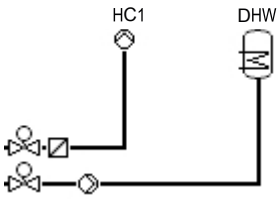
Default setting	
CO1 → F01	- 0 (without RF1)
CO1 → F02	- 1 (with AF1)
CO1 → F03	- 1 (with RüF1)
CO4 → F01	- 1 (with SF1)
CO4 → F02	- 0 (without SF2)
CO4 → F03	- 0 (without RüF2)
CO5 → F34	Function of the 0 to 10 V output: – Control signal Y1 (RK1) – Control signal Y2 (RK2) – External demand — When CO1 → F18 - 1 – SLP speed — When CO4 → F21 - 1 – Outdoor temperature — When CO5 → F23 - 1 Direction 'Output'

System 11.1-2

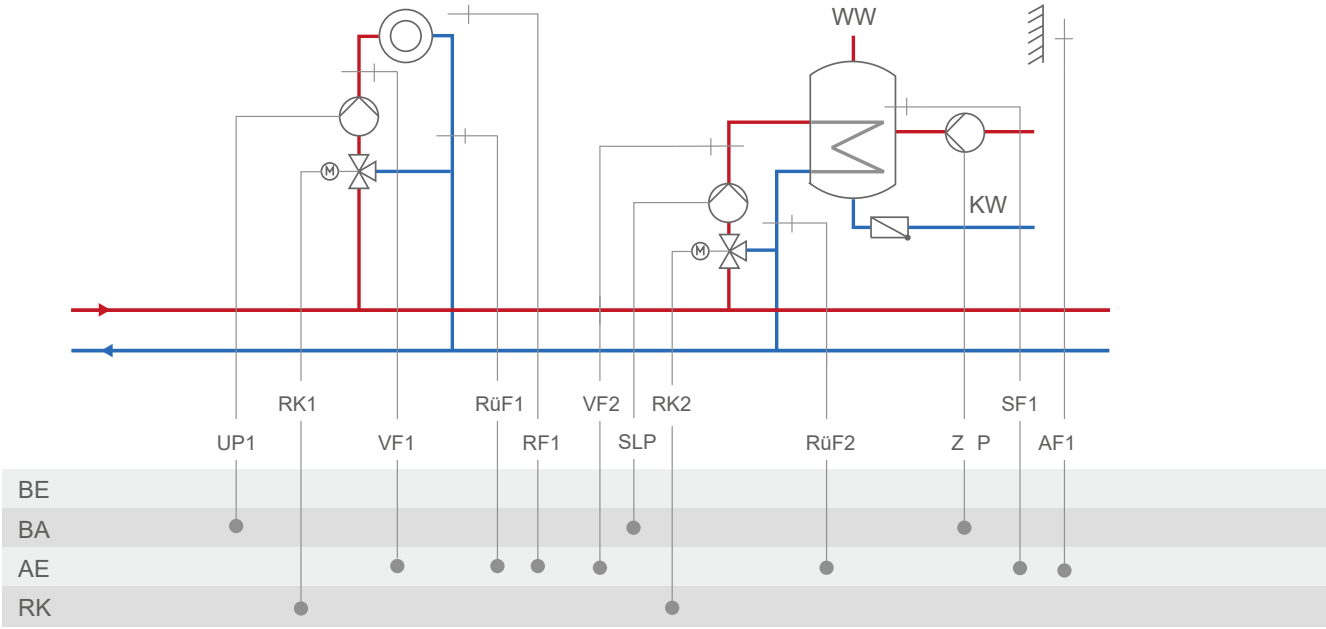

System	11.1-2
	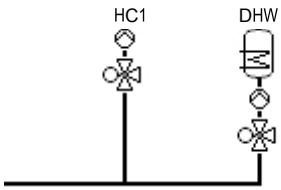
Default setting	
CO1 → F01	- 0 (without RF1)
CO1 → F02	- 1 (with AF1)
CO1 → F03	- 1 (with RüF1)
CO4 → F01	- 1 (with SF1)
CO4 → F02	- 0 (without SF2)
CO4 → F03	- 0 (without RüF2)
CO5 → F34	Function of the 0 to 10 V output: – Control signal Y1 (RK1) – Control signal Y2 (RK2) – External demand — When CO1 → F18 - 1 – SLP speed — When CO4 → F21 - 1 – Outdoor temperature — When CO5 → F23 - 1 Direction 'Output'

System 11.1-3

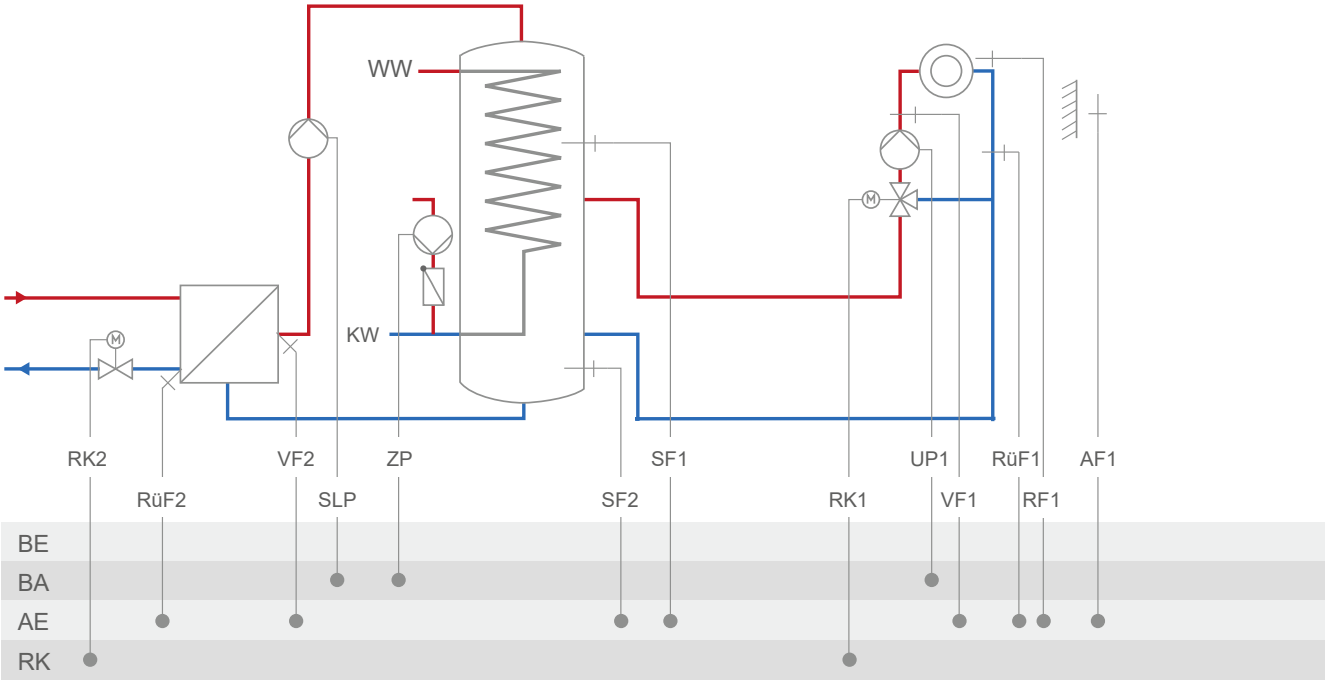

System	11.1-3
	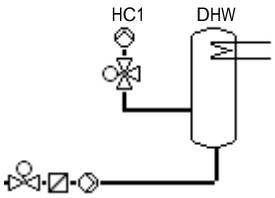
Default setting	
CO1 → F01	- 0 (without RF1)
CO1 → F02	- 1 (with AF1)
CO1 → F03	- 1 (with RüF1)
CO4 → F01	- 1 (with SF1)
CO4 → F02	- 0 (without SF2)
CO4 → F03	- 0 (without RüF2)
CO5 → F34	Function of the 0 to 10 V output: – Control signal Y1 (RK1) – Control signal Y2 (RK2) – External demand — When CO1 → F18 - 1 – SLP speed — When CO4 → F21 - 1 – Outdoor temperature — When CO5 → F23 - 1 Direction 'Output'

System 11.2

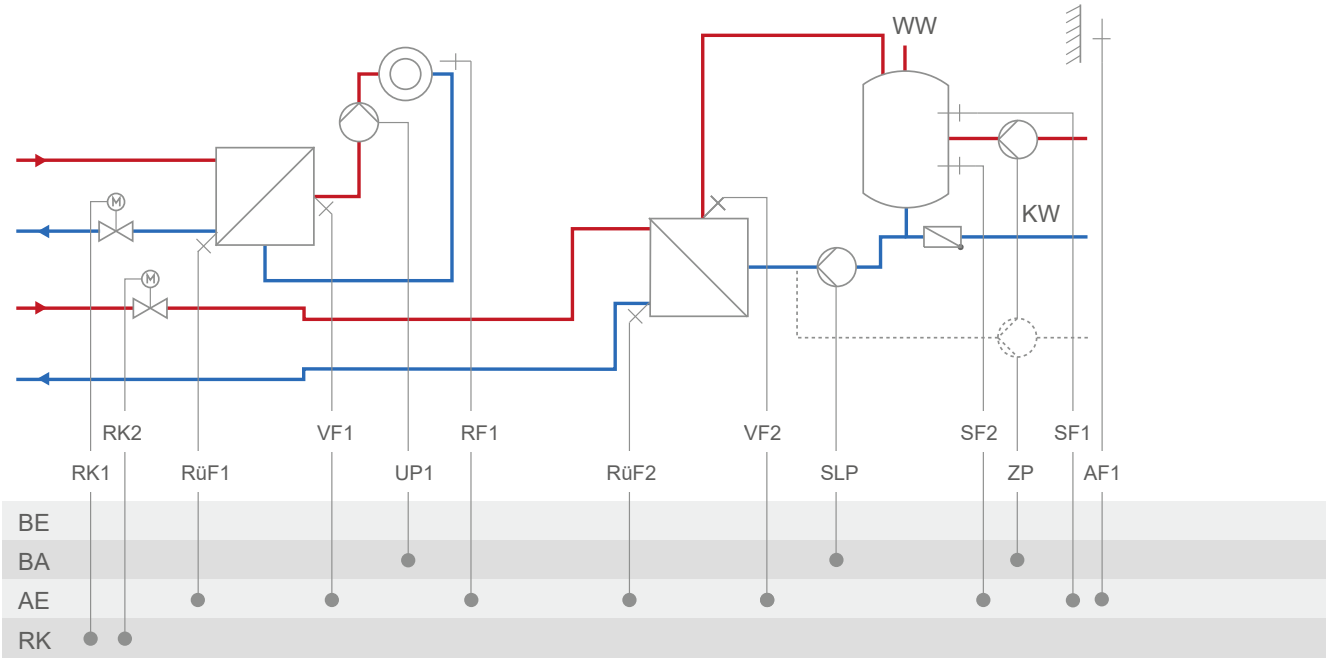

System	11.2
	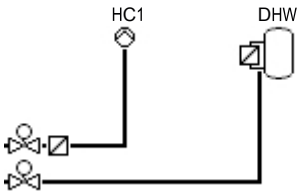
Default setting	
CO1 → F01	- 0 (without RF1)
CO1 → F02	- 1 (with AF1)
CO1 → F03	- 1 (with RüF1)
CO4 → F01	- 1 (with SF1)
CO4 → F02	- 1 (with SF2)
CO4 → F03	- 0 (without RüF2)
CO4 → F10	- 0 (DHW circulation return in storage tank)
CO5 → F34	Function of the 0 to 10 V output: – Control signal Y1 (RK1) – Control signal Y2 (RK2) – External demand — When CO1 → F18 - 1 – SLP speed — When CO4 → F21 - 1 – Outdoor temperature — When CO5 → F23 - 1 Direction 'Output'

System 11.5

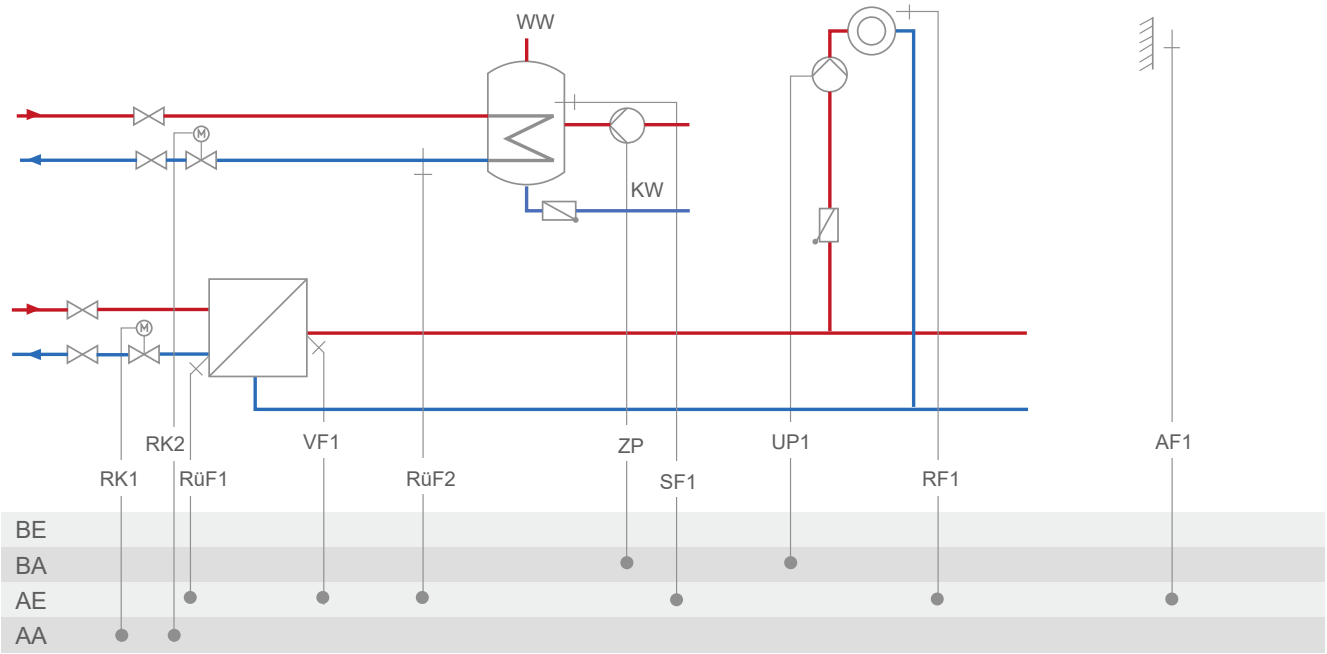

System	11.5
	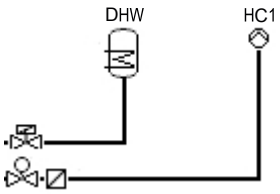
Note:	DHW circuit with adjustable valve position for storage tank charging in absolute priority operation By using RüF2, the ready-adjusted valve position is subject to the return temperature limitation.
Default setting	
CO1 → F01	- 0 (without RF1)
CO1 → F02	- 1 (with AF1)
CO4 → F02	- 0 (without SF2)
CO4 → F03	- 1 (with RüF2)
CO5 → F34	Function of the 0 to 10 V output: – Control signal Y1 (RK1) – Control signal Y2 (RK2) – External demand — When CO1 → F18 - 1 – Outdoor temperature — When CO5 → F23 - 1 Direction 'Output'

System 11.6

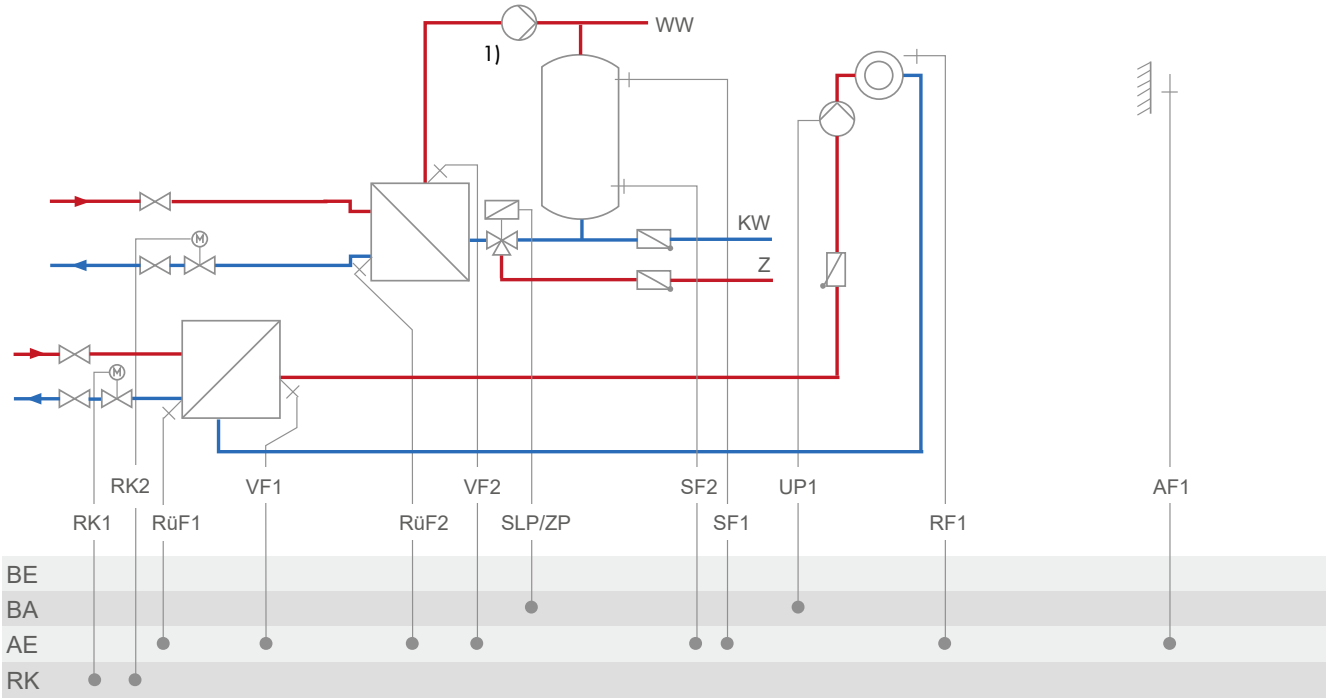

System	11.6
	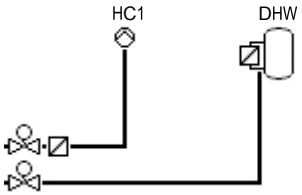
[1] Note:	Install a continuously running pump in the DHW circuit and connect it directly to the supply voltage.
Default setting	
CO1 → F01	- 0 (without RF1)
CO1 → F02	- 1 (with AF1)
CO1 → F03	- 1 (with RüF1)
CO4 → F01	- 1 (with SF1)
CO4 → F02	- 1 (with SF2)
CO4 → F03	- 0 (without RüF2)
CO5 → F34	Function of the 0 to 10 V output: – Control signal Y1 (RK1) – Control signal Y2 (RK2) – External demand — When CO1 → F18 - 1 – Outdoor temperature — When CO5 → F23 - 1 Direction 'Output'

System 11.9

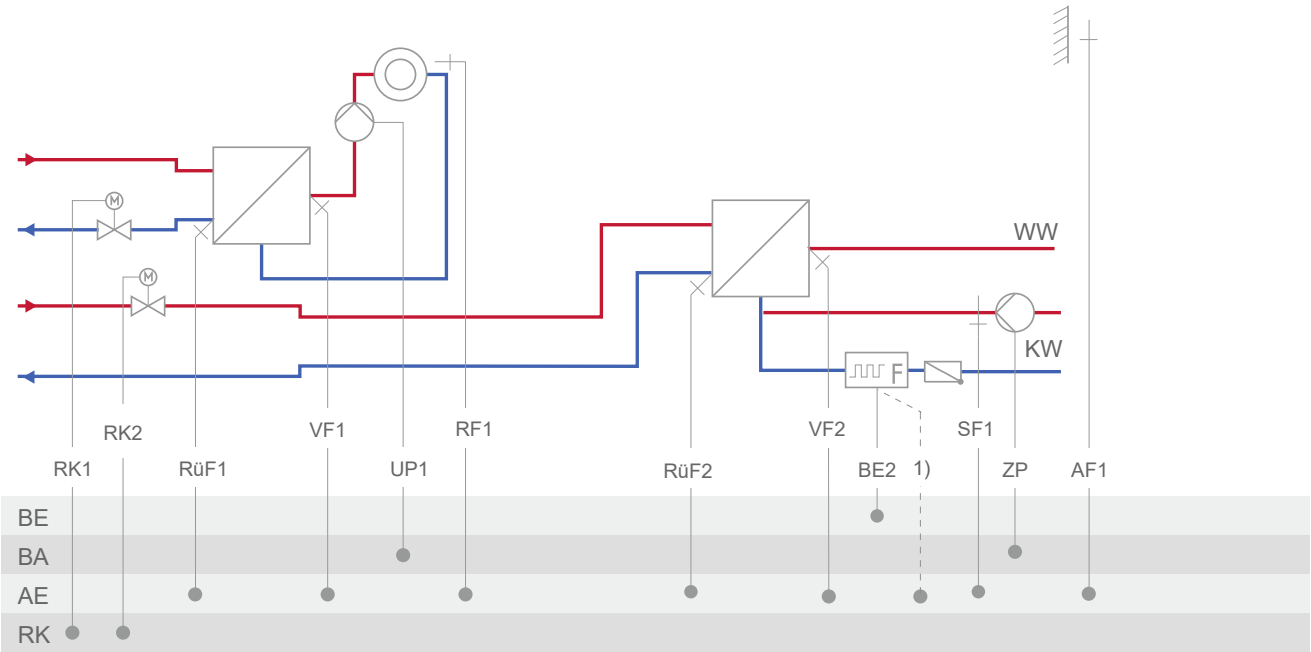

1) bei Vortex-Sensor Kl. 11

System	11.9-1
	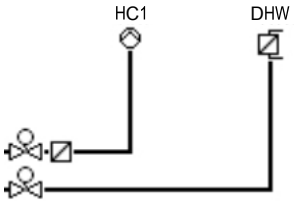
Default setting	
CO1 → F01	- 0 (without RF1)
CO1 → F02	- 1 (with AF1)
CO1 → F03	- 1 (with RüF1)
CO4 → F01	- 0 (without SF1)
CO4 → F03	- 0 (without RüF2)
CO4 → F04	- 0 (without water flow sensor)
CO5 → F07	- 0 (without error message at terminal 37)
CO5 → F34	0 to 10 V output function: – Control signal Y1 (RK1) – Control signal Y2 (RK2) – 10 V supply – External demand — When CO1 → F18 - 1 – Outdoor temperature — When CO5 → F23 - 1 Direction 'Output'

System 16.0

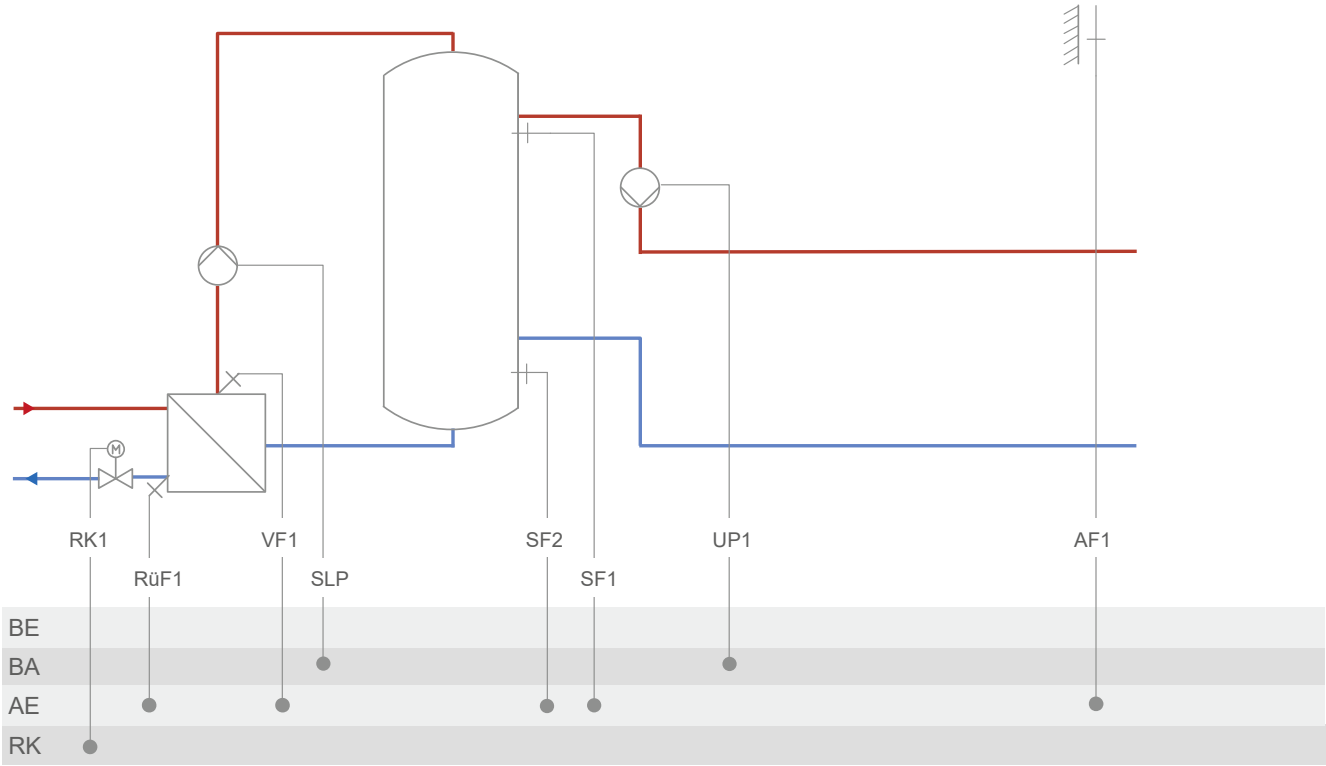

System	16.0
	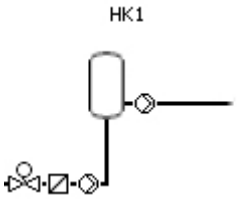
Default setting	
CO1 → F02	- 1 (with AF1)
CO1 → F03	- 1 (with RüF1)
CO1 → F06	- 1 (with SF2)
CO5 → F07	- 0 (without error message at terminal 29)
CO5 → F34	Function of the 0 to 10 V output: – Control signal Y1 (RK1) – Differential temperature control When CO1 → F23 - 1 – External demand When CO1 → F18 - 1 – SLP speed When CO1 → F21 - 1 – Outdoor temperature When CO5 → F23 - 1 Direction 'Output'

System 16.1

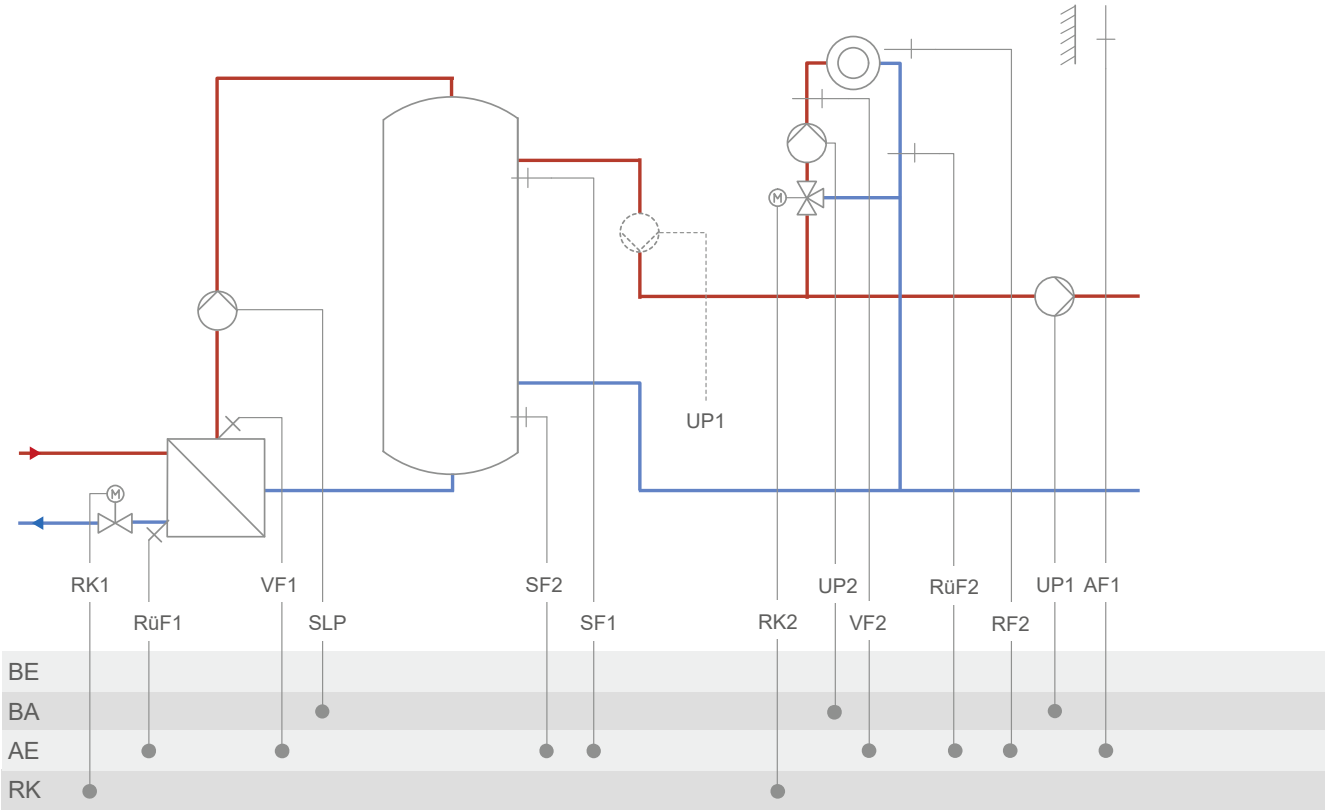

System	16.1
	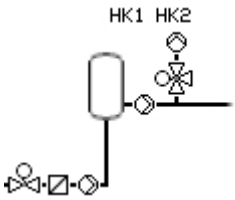
Default setting	
CO1 → F02	- 0 (without AF1)
CO1 → F03	- 1 (with RüF1)
CO1 → F06	- 1 (with SF2)
CO2 → F02	- 1 (with AF1)
CO2 → F03	- 0 (without RüF2)
CO5 → F34	Function of the 0 to 10 V output: – Control signal Y1 (RK1) – Control signal Y2 (RK2) – External demand — When CO1 → F18 - 1 – SLP speed — When CO1 → F21 - 1 – Outdoor temperature — When CO5 → F23 - 1 Direction 'Output'

System 16.2

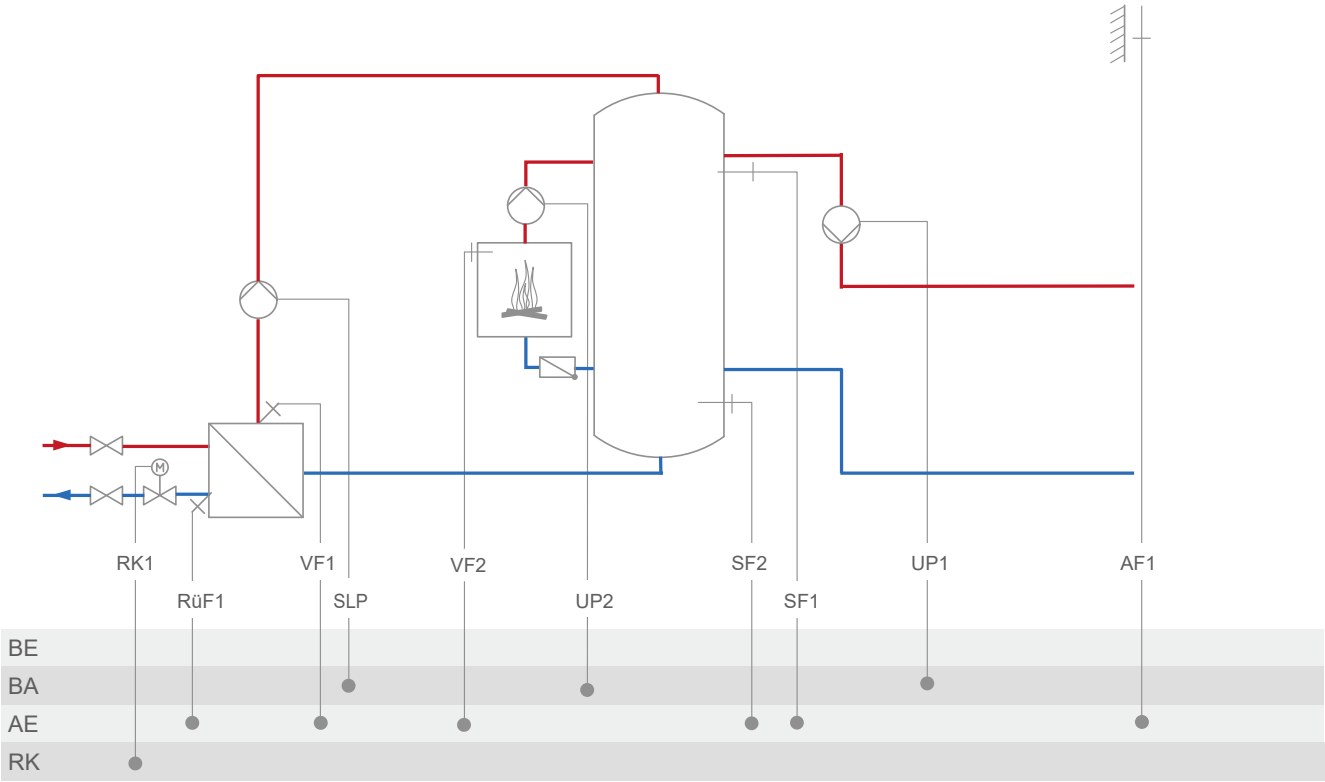

System	16.2
	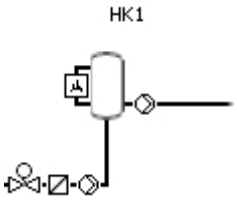
Default setting	
CO1 → F02	- 1 (with AF1)
CO1 → F03	- 1 (with RüF1)
CO1 → F06	- 1 (with SF2)
CO5 → F07	- 0 (without error message at terminal 29)
CO5 → F34	Function of the 0 to 10 V output: – Control signal Y1 (RK1) – External demand — When CO1 → F18 - 1 – SLP speed — When CO1 → F21 - 1 – Outdoor temperature — When CO5 → F23 - 1 Direction 'Output'

System 16.3

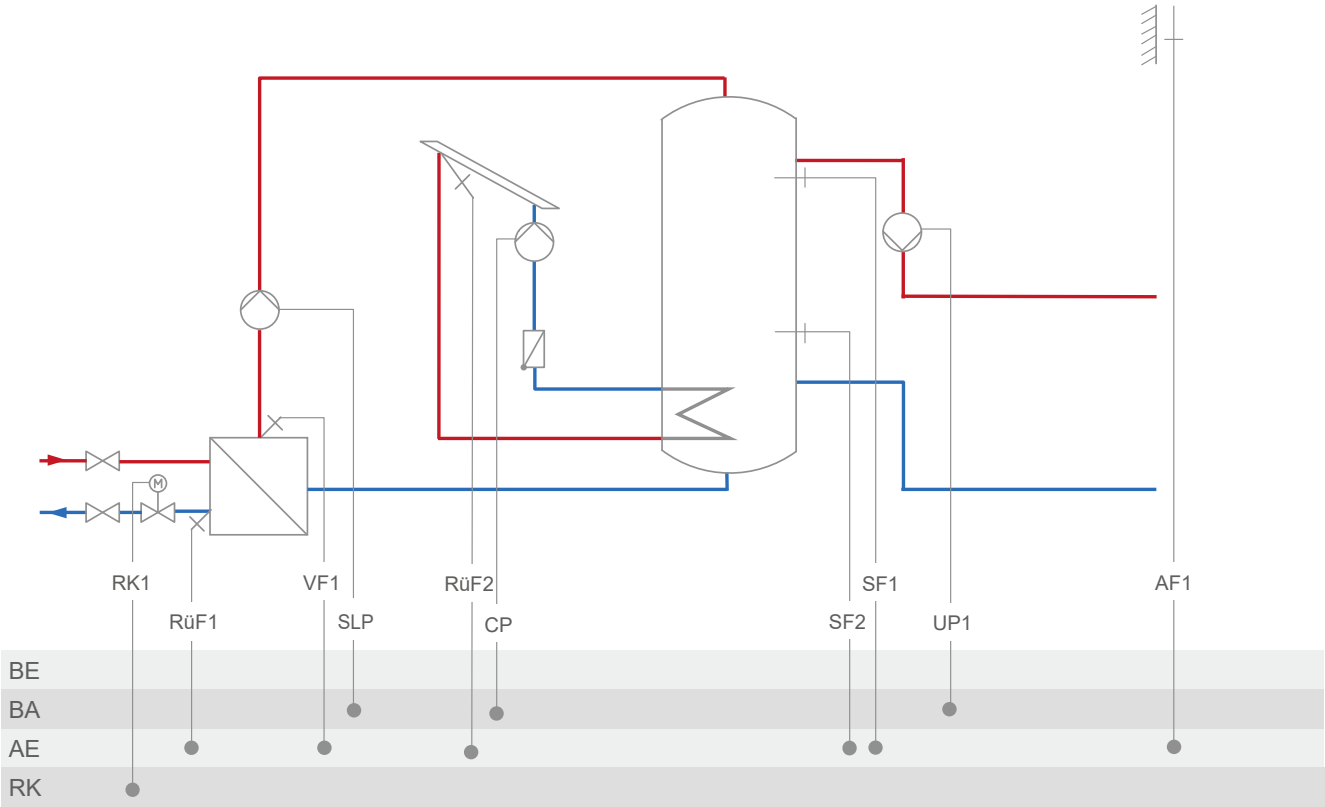

System	16.3
	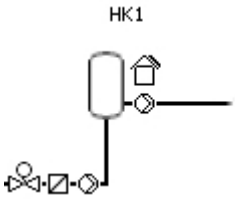
Default setting	
CO1 → F02	- 1 (with AF1)
CO1 → F03	- 1 (with RüF1)
CO1 → F06	- 1 (with SF2)
CO5 → F07	- 0 (without error message at terminal 29)
CO5 → F34	Function of the 0 to 10 V output: – Control signal Y1 (RK1) – External demand — When CO1 → F18 - 1 – SLP speed — When CO1 → F21 - 1 – Outdoor temperature — When CO5 → F23 - 1 Direction 'Output'

System 16.4

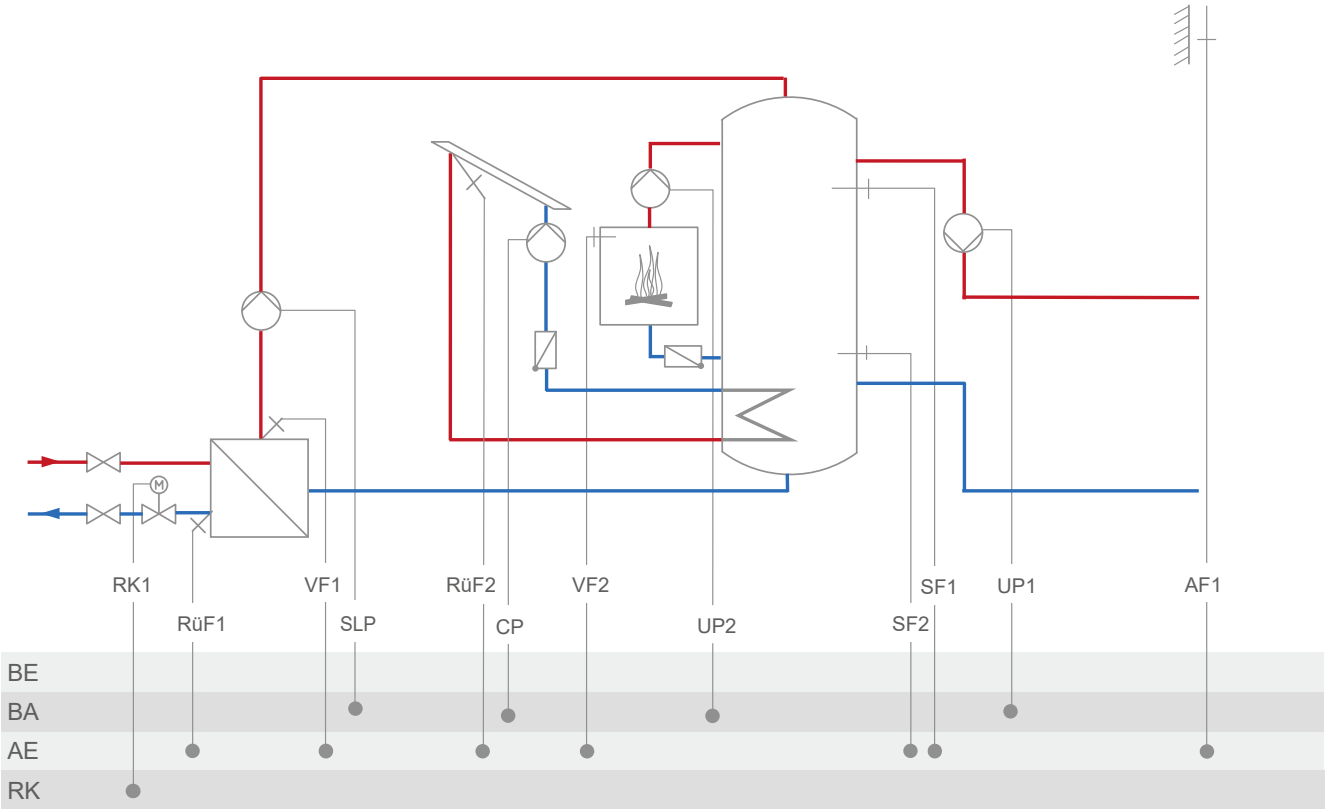

System	16.4
	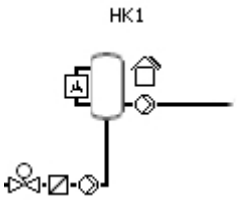
Default setting	
CO1 → F02	- 1 (with AF1)
CO1 → F03	- 1 (with RüF1)
CO1 → F06	- 1 (with SF2)
CO5 → F07	- 0 (without error message at terminal 29)
CO5 → F34	Function of the 0 to 10 V output: – Control signal Y1 (RK1) – External demand — When CO1 → F18 - 1 – SLP speed — When CO1 → F21 - 1 – Outdoor temperature — When CO5 → F23 - 1 Direction 'Output'

System 16.6

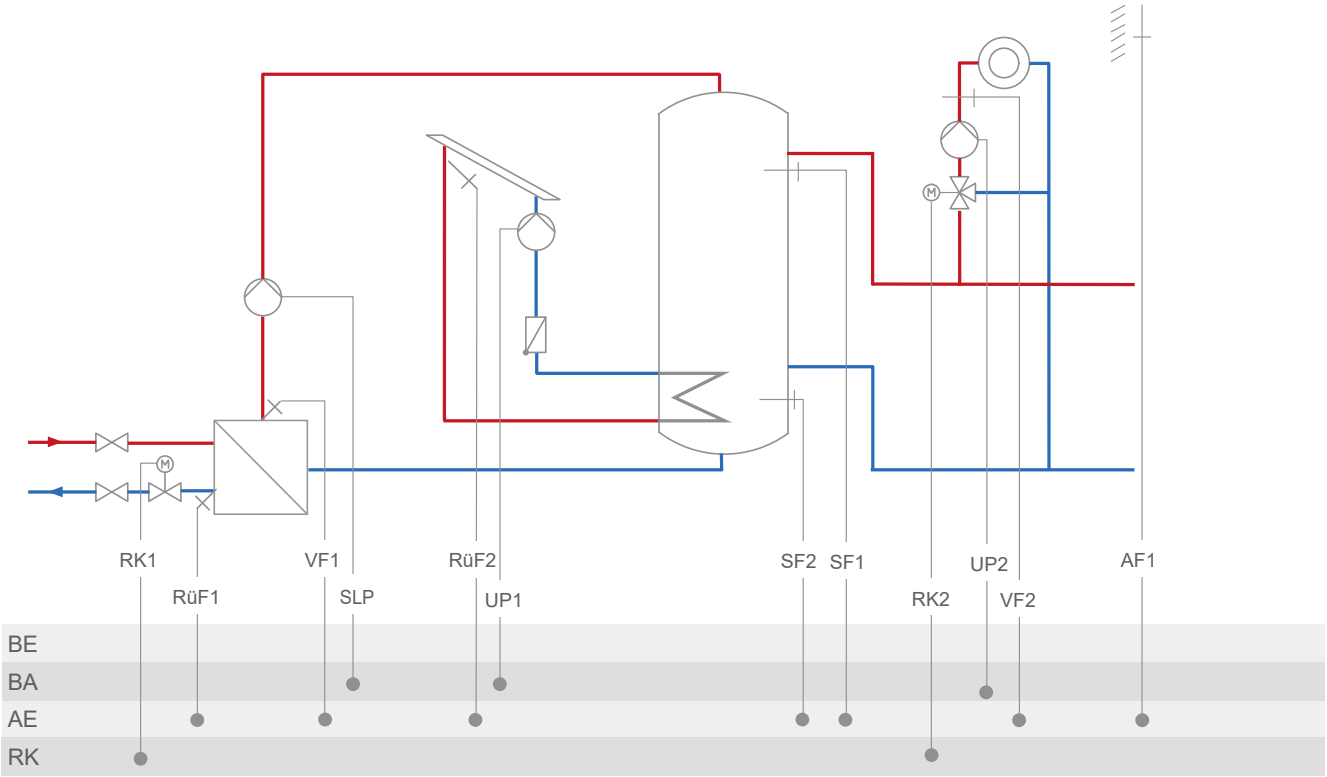

System	16.6
	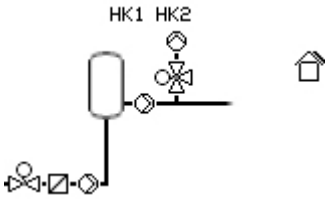
Default setting	
CO1 → F02	- 1 (with AF1)
CO1 → F03	- 1 (with RüF1)
CO1 → F06	- 1 (with SF2)
CO2 → F02	- 1 (with AF1)
CO2 → F03	- 0 (without RüF2)
CO5 → F34	Function of the 0 to 10 V output: – Control signal Y1 (RK1) – Control signal Y2 (RK2) – External demand — When CO1 → F18 - 1 – SLP speed — When CO1 → F21 - 1 – Outdoor temperature — When CO5 → F23 - 1 Direction 'Output'

16.2 Functions of the heating circuit

Which controller functions are available depends on the selected system code number.

16.2.1 Outdoor-temperature-compensated control

When outdoor-temperature-compensated control is used, the flow temperature is controlled based on the outdoor temperature. The heating characteristic in the heating controller defines the flow temperature set point as a function of the outdoor temperature (see Fig. 12).

The outdoor temperature required for outdoor-temperature-compensated control can either be measured with an outdoor sensor or received over the 0 to 10 V input.

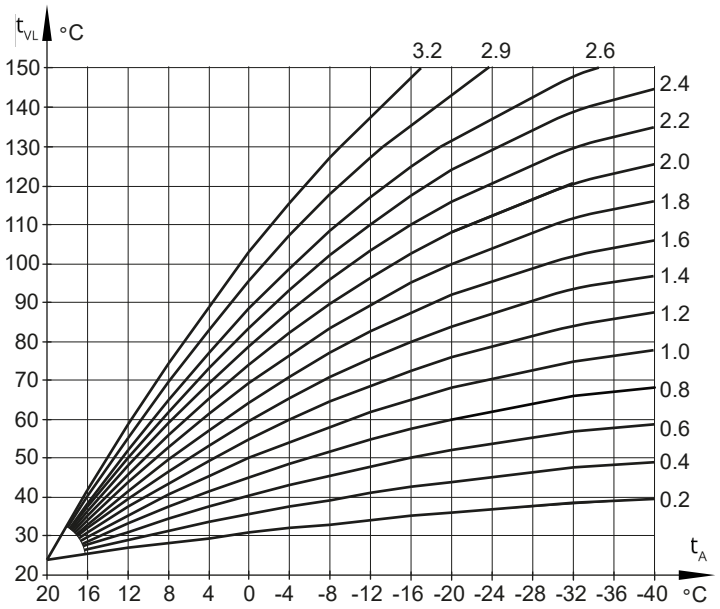

t_{VL}: Flow temperature
t_A: Outdoor temperature

Fig. 12: *Gradient characteristics*

16.2.1.1 Outdoor temperature received or sent as 0 to 10 V signal

The outdoor temperature can be received as a 0 to 10 V signal. Alternatively, the temperature measured by the outdoor sensor can be issued as a 0 to 10 V signal.

The zero of the 0 to 10 V input and output signals can be shifted, if required.

Function	Default	Configuration
Outdoor sensor AF1	1	CO1, 2 → F02 - 1
Send or receive outdoor temperature as 0 to 10 V signal	0	CO5 → F23 - 1
Send or receive outdoor temperature as 0 to 10 V signal	Input	Direction: Input (receive)
Send or receive outdoor temperature as 0 to 10 V signal	–20 °C	Lower transmission range: –50 to +100 °C
Send or receive outdoor temperature as 0 to 10 V signal	+50 °C	Upper transmission range: –50 to +100 °C
AE1 zero shift	0	CO5 → F31 - 1
	5 %	Zero: 5 to 20 %
Send or receive outdoor temperature as 0 to 10 V signal	0	CO5 → F23 - 1
Send or receive outdoor temperature as 0 to 10 V signal	Input	Direction: Output (send)
Send or receive outdoor temperature as 0 to 10 V signal	–20 °C	Lower transmission range: –50 to +100 °C
	+50 °C	Upper transmission range: –50 to +100 °C
AA1 reverse	0	CO5 → F25 - 0
	0 %	Zero: 0 to 50 %
AA1 PWM	0	Function: Outdoor temperature

16.2.1.2 Gradient characteristic

Basically, the following rule applies:

A decrease in the outdoor temperature causes the flow temperature to increase in order to keep the room temperature constant. By varying the 'Gradient' and 'Level' parameters, you can adapt the characteristic to your individual requirements.

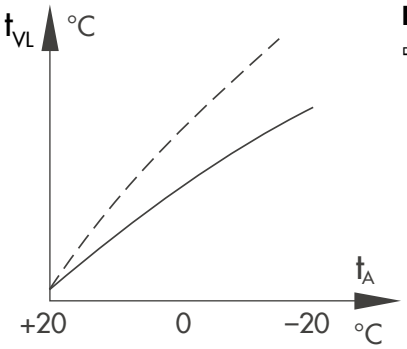

Room temperature dropping in cold season

⇨ Raise the gradient

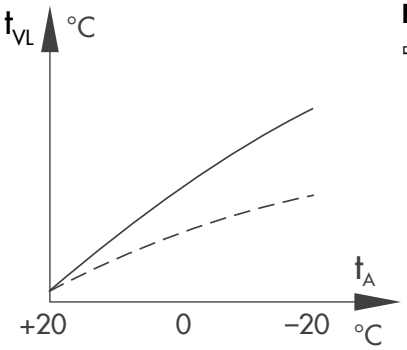

Room temperature rising in cold season

⇨ Decrease the gradient

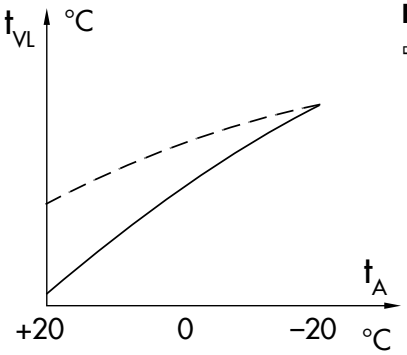

Room temperature dropping between seasons

⇨ Raise the level and decrease the gradient

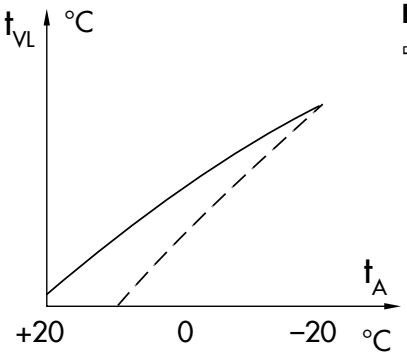

Room temperature rising between seasons

⇨ Decrease the level and raise the gradient

Outside the times-of-use, reduced set points are used for control:

The reduced flow set point is calculated as the difference between the adjusted values for 'Day set point' (rated room temperature) and 'Night set point' (reduced room temperature). The 'Max. flow temperature' and 'Min. flow temperature' parameters mark the upper and lower limits of the flow temperature. A separate gradient characteristic can be selected for the limitation of the return temperature.

Examples for adjusting the characteristic:

- Old building, radiator design 90/70: Gradient approx. 1.8
- New building, radiator design 70/55: Gradient approx. 1.4
- New building, radiator design 55/45: Gradient approx. 1.0
- Underfloor heating depending on arrangement: Gradient <0.5

i Note

Particularly for control operation without room sensor, the room temperatures set for day ('Day set point') and night ('Night set point') only become effective satisfactorily when the heating characteristic has been adapted to the building/heating surface layout.

Function	Default	Configuration
Four-point characteristic	0	CO1, 2 → F11 - 0

Parameters	Default	Switch position: value range
Day set point	20.0 °C	0.0 to 40.0 °C
Night set point	15.0 °C	0.0 to 40.0 °C

Parameters	Default	Parameter level: value range
Flow gradient		
Flow gradient	1, 2 [1]	PA1, 2 → P01: 0.2 to 3.2
Level (parallel shift)	0.0 °C	PA1, 2 → P02: –30.0 to +30.0 °C
Min. flow temperature	+20.0 °C	PA1, 2 → P06: –5.0 to +150.0 °C
Max. flow temperature	90 °C [1]	PA1, 2 → P07: 5.0 to 150.0 °C

1) When CO1, 2 → F05 - 1, the following applies:
Flow gradient: 0.2 to 1.0 (0.5)
Max. flow temperature: 5.0 to 50.0 °C (50.0 °C)

16.2.1.3 Four-point characteristic

The four-point characteristic allows you to define your own heating characteristic. It is defined by four points for the outdoor temperature, flow temperature, reduced flow temperature and return temperature. The 'Max. flow temperature' and 'Min. flow temperature' parameters mark the upper and lower limits of the flow temperature.

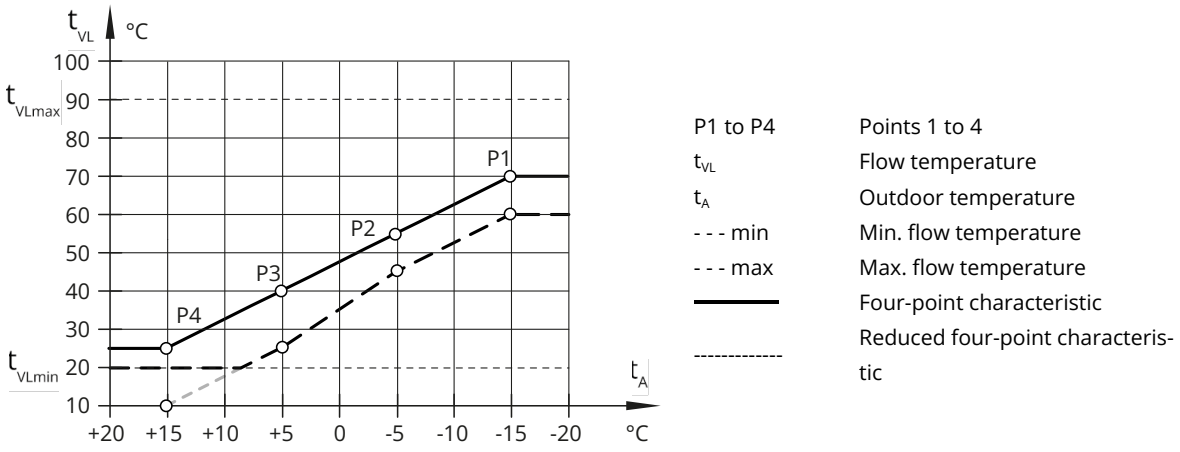

Fig. 13: *Four-point characteristic*

i ***Note***

- *The 'Day set point' and 'Night set point' parameters are no longer available when the four-point characteristic has been selected when no additional functions (e.g. optimization, flash adaptation) have been selected.*
- *The Four-point characteristic function can only be activated when the adaptation function is not active (CO1, 2 → F08 - 0).*

Function	Default	Configuration
Adaptation	0	CO1, 2 → F08 - 0 CO1, 2, 3, 11, 12, 13 → F08 - 0
Four-point characteristic	0	CO1, 2 → F011- 1 CO1, 2, 3, 11, 12, 13 → F11 - 1

Parameters		Default	Parameter level: value range
Outdoor temperature	Point 1	–15.0 °C	PA1, 2 → P05: –50.0 to +50.0 °C
	Point 2	–5.0 °C	
	Point 3	+5.0 °C	
	Point 4	+15.0 °C	
Flow temperature	Point 1	+70.0 °C	PA1, 2 → P05: –5.0 to +150.0 °C
	Point 2	+55 °C	
	Point 3	+40.0 °C	
	Point 4	+25.0 °C	
Reduced flow temperature	Point 1	+60.0 °C	PA1, 2 → P05: –5.0 to +150.0 °C
	Point 2	+40 °C	
	Point 3	+20.0 °C	
	Point 4	+20.0 °C	
Return temperature	Points 1 to 4	65.0 °C	PA1, 2 → P05: 5.0 to 90.0 °C
Min. flow temperature		+20.0 °C	PA1, 2 → P05: –5.0 to +150.0 °C
Max. flow temperature		70.0 °C [1)]	PA1, 2 → P05: 5.0 to +150.0 °C

1) When CO1, 2 → F05 - 1, the following applies:
Max. flow temperature: 5.0 to 50.0 °C (50 °C)

16.2.2 Fixed set point control

During the times-of-use, the flow temperature can be controlled according to a fixed set point. Outside the times-of-use, the reduced flow temperature is controlled. Set the desired rated flow temperature as 'Day set point' and the reduced flow temperature as 'Night set point'.

Function	Default	Configuration
Outdoor sensor AF1		CO1, 2 → F02 - 0

Parameters	Default	Switch position: value range
Day set point	50.0 °C	☼ Min. to max. flow temperature
Night set point	30.0 °C	☾ Min. to max. flow temperature

Parameters	Default	Parameter level: value range
Min. flow temperature	+20.0 °C	PA1, 2: –5.0 to +150.0 °C PA1, 2 → P06: –5.0 to +150.0 °C PA1, 2, 3, 11, 12, 13 → P06: –5.0 to +150.0 °C
Max. flow temperature	70.0 °C	PA1, 2: 5.0 to 150.0 °C PA1, 2 → P07: 5.0 to 150.0 °C PA1, 2, 3, 11, 12, 13 → P07: 5.0 to 150.0 °C

16.2.3 Underfloor heating/drying of jointless floors

The CO1, 2 → F05 - 1 setting defines the respective heating circuit as an underfloor heating circuit. In doing so, the controller at first only limits the value ranges of the heating characteristic gradient and the maximum flow temperature in PA1 and 2 parameter levels:

- Value range of the gradient: 0.2 to 1.0
- Value range of the maximum flow temperature: 5 to 50 °C

Furthermore, it is possible to set a **Boost** between 0.0 to 50.0 °C, which is additionally taken into account when there is a heat demand for the underfloor heating circuit of an upstream control circuit.

The **Drying of jointless floors** function can be activated afterwards. The function block parameters (starting with the **Start temperature**) determine the drying process. The first heating up phase starts at the entered 'Start temperature', which has a flow temperature of 25 °C (default setting). The start temperature is kept constant for the days entered in 'Hold (days)'. Afterwards, this temperature is raised by the value entered in 'Temp. rise/day' within 24 hours, e.g. the default setting causes the flow temperature set point to rise to 30 °C 24 hours after the holding phase. If the maximum temperature is reached, it is kept constant for the number of days entered in 'Hold (days)'. The 'Temp. reduction/day' parameter determines the temperature reduction. If the 'Temp. reduction/day' is set to 0, the temperature holding phase changes directly to the automatic mode. If the function block parameter 'Start temperature' is set to 25 °C and 'Temp. rise/day' to 0.0 °C, the drying function runs as specified in DIN EN 1264-4:

The drying of jointless floors function starts with a flow temperature of 25 °C. This temperature is kept constant for three days. Afterwards, the controller switches to the maximum temperature adjusted. The process continues unchanged.

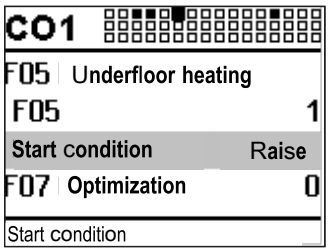

The **Drying of jointless floors** function is activated with the entered 'Start temperature' by changing the default setting from 'Stop' to 'Start'. 'Start' appears on the display after the process starts. The restarting stages 'Raise', 'Hold' (holding the maximum temperature) and 'Reduction' can be selected to continue an interrupted drying process. The course of the drying process can be monitored in the operating level by reading the measured data of the associated heating circuit.

The drying process has been successfully completed when 'Done' is displayed. This reading disappears from the display after resetting the display to 'Stop' in CO1, 2 → F05 or after reconnection of the supply voltage after a power failure. If a power failure occurs while the drying process is in progress, the drying process continues afterwards exactly at the point at which it was interrupted when the power is reconnected. In systems in which the drying function had to be interrupted due to DHW heating (e.g. system 2.1), storage tank charging does not take place while the drying function is active, provided it is not used for frost protection of the storage tank.

i Note

The function block parameter can only be accessed after starting the function by resetting to 'Stop' in CO1, 2 → F05.

Function	Default	Configuration
Underfloor heating/drying of jointless floors	0	CO1, 2 → F05 - 1
	0.0 °C	Boost: 0.0 to 50.0 °C
	25.0 °C	Start temperature: 20.0 to 60.0 °C
	0	Hold (days): 0 to 10 days
	5.0 °C	Temp. rise/day: 0.0 to 10.0 °C
	45.0 °C	Maximum temperature: 25.0 to 60.0 °C
	4	Hold (days): 0 to 30 days
	0.0 °C	Temp. reduction/day: 0.0 to 10.0 °C
	Stop	Start condition: Stop, Start, Raise, Hold, Reduction

16.2.4 Night set-back

The night set-back (= difference between the target flow temperature in day and night mode) is calculated in all heating circuits with a gradient characteristic as follows:

2x Heating characteristic gradient x (day room temperature – night room temperature)

16.2.4.1 Outdoor temperature for continuous day mode

If a heating circuit is in night mode (automatic mode, ⏲), this circuit is switched to day mode whenever the outdoor temperature falls below the limit 'Outdoor temperature for continuous day mode'. The night mode restarts after the outdoor temperature rises above the limit (plus 0.5 °C hysteresis).

This function prevents the building from cooling down excessively outside the times-of-use when low outdoor temperatures occur. The transition towards day mode can be configured to be variable depending on the outdoor temperature.

Parameters	Default	Parameter level: value range
Outdoor temperature for continuous day mode	–15.0 °C	PA1, 2 → P09: –50.0 to +5.0 °C (only when CO1, CO2 → F28 - 0)

16.2.4.2 Variable night set-back

The CO1, CO2 → F28 - 1 setting causes the night set-back to be variable based on the decreasing outdoor temperature.

The night set-back is fully effective at outdoor temperatures above the outdoor temperature limit value 'OTL night 100 %'. The absolute value of the night set-back is linearly reduced to zero in the range between this value and the outdoor temperature limit value 'OTL night 0 %' for continuous day mode.

The absolute value of the night set-back is indicated in the 'Night set points' menu as 'HC1, HC2 night set-back'. It is also indicated during day mode, but has no effect.

By configuring CO1, CO2 → F28 - 1, the 'Outdoor temperature for continuous day mode' (P09) parameter is not used in the corresponding PA level.

Function	Default	Configuration
Variable night set-back	0	CO1, CO2 → F28 - 1 (only when CO1, CO2 → F11 - 0)
	+5.0 °C	OTL night 100 %: –50 to +20 °C
	–15 °C	OTL day 0 %: –50 to +5 °C

16.2.4.3 Smooth transition

The transition from night to day or vice versa may cause major changes to the set point. Major changes to the flow temperature set point create energy peaks, which cause loud noises in the heating system.

The CO5 → F41 - 1 setting helps avoid abrupt changes to the set point of heating circuits due to the change from day to night mode or vice versa based on the programmed time schedule.

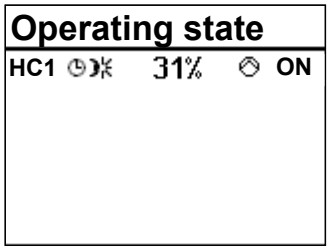

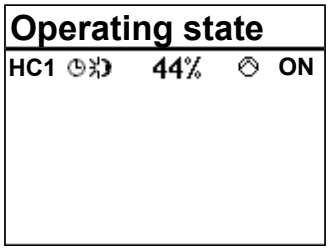

The 'Day-night' parameter determines the runtime of the linear set point change from the current day to the night set point starting at the programmed end of the time-of-use.

The 'Night-day' parameter determines the runtime of the set point change from the current night to the day mode starting correspondingly earlier than the programmed start of the time-of-use.

An active smooth transition function is indicated by the following icon combination:

Night-day ramp
Day-night ramp

'Mode: Night-day' or 'Mode: Day-night' is indicated on the display in the operating level of the heating circuit(s).

Function	Default	Configuration
Smooth transition	0	CO5 → F41 - 1 (only when CO1, CO2 → F29 - 0)
	30 min	Day-night: 0 to 240 min
	30 min	Night-day: 0 to 240 min

16.2.4.4 Rapid heat-up

This function can be configured separately for each heating circuit. It helps shorten the heating-up time by temporarily raising the flow set point for day mode. The 'Duration' parameter determines how long the system runs with the raised flow temperature during the transition to day mode. The 'Raise' parameter determines how high (percent) the normal flow set point is to be raised for day mode.

The rapid heat-up is only active once within 24 hours at the first mode change from night to day mode. It starts either automatically based on the programmed time schedule or due to a manual mode change. An active rapid heat-up function is indicated by a blinking sun icon.

In the operating level of the heating circuit concerned, 'Mode: Day' is indicated without any further information.

i Note

Only one of the functions 'Rapid heat-up', 'Optimization' or 'Smooth transition' can be used for a heating circuit at one time.

Function	Default	Configuration
Rapid heat-up	0	CO1, CO2 → F29 - 1 (only when CO1, CO2 → F07 - 0 and CO5 → F41 - 0)
	45 min	Duration: 10 to 120 min
	30 %	Raise: 1 to 100 %

16.2.5 Buffer tank systems 16.x

A heating characteristic based on a gradient or four entered points can be set in PA1 for the buffer tanks in systems 16.x. A buffer tank set point for day mode and a buffer tank set point for night mode can be set without outdoor sensors in the customer level. An external demand transmitted from secondary controlled heating circuits, from the DHW circuit or an external request (0 to 10 V or binary signal) can override the current buffer tank set point. The maximum demand is indicated as the buffer tank set point for SF1. If the temperature falls below the buffer tank set point at SF1, charging of the buffer tank is started.

The set point of the charging temperature is determined by the 'Minimum set point to charge buffer tank' parameter setting in the PA1 level. The automatic adaptation ('AUTO' setting) causes the set point of the charging temperature to always be above the current buffer tank set point by the value entered in 'Charging temperature boost'.

Every other value entered in 'Minimum set point to charge buffer tank' is used as the minimum set point for the charging temperature which first starts to be variable at higher buffer tank set points. When a return temperature sensor RüF1 is used, the charging pump SLP (CO1 → F22 - 1) is first released to avoid cold charging when the temperature measured at RüF1 has reached the same temperature measured at SF1.

An activated discharging protection function (CO1 → F27 - 1) causes the charging to be stopped when the charging temperature does not reach its set point even though the valve is fully open or it falls below the temperature measured at SF1 and does not rise again. Charging with the valve fully open is stopped after one hour at the latest.

The CO1 → F27 - 1 setting causes a 2 °C higher charging set point to be calculated. The following then applies:

Charging set point = Set point at SF1 + 'Charging temperature boost' + 2 °C

The 'Stop charging of the buffer tank' parameter (PA1, default = AUTO) determines under which conditions the charging of the buffer tank is stopped. The automatic adaptation ('AUTO' setting) causes the buffer tank charging to be stopped when the temperature in the buffer tank reaches the value ('Buffer tank set point' + 'Hysteresis of buffer tank'.

Every other value entered for 'Stop charging of the buffer tank' is rated as a fixed switch-off temperature for the buffer tank charging. When SF2 (CO1 → F06 - 1) is configured, SF2 is always used to stop the charging of the buffer tank.

If the temperature falls below the buffer tank set point at SF1 while the temperature measured at SF2 is still greater than the value in 'Stop charging of the buffer tank', charging is not stopped until the temperature is 3° C lower than the buffer tank set point at SF1.

The storage tank charging pump SLP is not switched off until the lag time (entered 'Valve transit time T_V' for RK1 multiplied by the value of 'Lag time of charging pump') has elapsed. The operation of the feeder pump UP1 is either determined by the ZP time schedule or prompted over an external demand. For systems with downstream control circuits, either only this external demand or the demand of the downstream control circuits causes the feeder pump UP1 to be activated, depending on the CO5 → F14 setting.

To switch on the pump UP2 of the solid fuel boiler circuit in systems 16.2 and 16.4, the temperature at VF2 must reach 'Start temperature for boiler pump' + 0.5 °C if the buffer tank (SF1) is cold.

If the temperature at SF1 is already reached, the temperature at VF2 must be greater than the temperature at SF1 + 'Boiler pump hysteresis' + 3 °C to switch on the pump UP2.

The pump UP2 is switched off again when the temperature at VF2 is lower than the temperature at SF1 + 'Boiler pump hysteresis' – 3 °C or it falls below the value of 'Start temperature for boiler pump'.

In systems 16.3, 16.4 and 16.6, a solar circuit is integrated, which uses sensor SF2 for control. The solar circuit pump CP is activated when the temperature at the collector sensor RüF2 is higher than that at the storage tank sensor SF2 by the value entered in 'Solar circuit pump ON'. It is deactivated when the temperature difference falls below the value entered in 'Solar circuit pump OFF', when the temperature at the storage tank sensor SF2 reaches 'Max. storage tank temperature' or when the collector temperature rises above 120 °C.

The temperature-based adaptation of the delivery rate of the charging pump SLP can be implemented using a 0 to 10 V signal. It can be reversed, if required.

The CO4 → F04 - 1 setting can be used to activate either a flow switch, a water flow sensor (1400-9246) or a vortex flow sensor. When a vortex flow sensor is used to measure the rate of hot water being tapped, enter the 'Lower range value' and 'Upper range value' for the measuring range settings based on the data provided in the data sheet of the vortex flow sensor. The expected rate of hot water that will actually be tapped is entered in the 'Processing start' and 'Processing end' parameters.If the vortex flow sensor is installed so that it not only measures the flow rate of the cold water but also the circulation flow rate, the 'Processing start' parameter can be used to exclude the measurement of the circulation flow rate.

The vortex flow sensor must be powered by an external source (usually 5 V). The CO5 → F34 setting determines whether the analog input or output is used.

A flow switch only allows the control of the DHW temperature to be activated outside the times-of-use of the circulation pump.

Note

The buffer tank control circuit is deactivated as described in Chapter 16.2.4.1. When predefined gradients of the heating characteristic (CO1 → F11 - 0) are used, night mode is not possible in the buffer tank control circuit. In contrast to an active four-point characteristic (CO1 → F11 - 1): in this case, a four-point characteristic exists for day and night modes.

Function	Default	Configuration
Storage tank sensor SF2	1	CO1 → F06 - 1
Speed control of the charging pump	0	CO1 → F21 - 1
	40.0 °C	Start speed reduction Limit: 5.0 to 90.0 °C
	50.0 °C	Stop speed reduction Limit: 5.0 to 90.0 °C
	20.0 °C	Minimum speed: 0 to 50 %
SLP depending on return temperature	0	CO1 → F22 - 1
Discharging protection	0	CO1 → F27 - 1
Water flow sensor	0	CO4 → F04 - 1 Sensor: Binary (= Flow switch at binary input BE2) Analog (= water flow sensor 1400-9246) 0 to 10 V/2 to 10 V (= vortex flow sensor) 0 to 20 mA/4 to 20 mA (= vortex flow sensor; 50 Ω parallel to the analog input) When a vortex flow sensor is used: Analog input 1 Lower range value: 0 to 10 V or 0 to 20 mA (adjustable in steps of 0.1) Lower range value: 0 to 250 l/min (adjustable in steps of 1 l/min) Upper range value: 0.1 to 10 V or 0.1 to 20 mA (adjustable in steps of 0.1) Upper range value: 0 to 250 l/min (adjustable in steps of 1 l/min) Processing start: 0 to 25 l/min (adjustable in steps of 0.1 l/min) Processing start: 0 to 250 l/min (adjustable in steps of 1 l/min)
AA1 reverse	0	CO5 → F25 - 1
	0 %	Zero: 0 to 50 %
AA1 PWM	0	CO5 → F34 - 0 TROVIS 5573-1 cannot process a PWM signal Function: SLP speed

Parameters	Default	Parameter level: value range
Minimum set point to charge buffer tank	AUTO	PA1 → P16: AUTO to 90.0 °C
Stop charging of the buffer tank	AUTO	PA1 → P17: AUTO to 90.0 °C
Charging temperature boost	6.0 °C	PA1 → P18: 0 to 50.0 °C
Lag time of charging pump	1.0	PA1 → P19: 0.0 to 10.0
Solar circuit pump ON	10.0 °C	PA4 → P10: 1.0 to 30.0 °C
Solar circuit pump OFF	3.0 °C	PA4 → P11: 0.0 to 30.0 °C
Max. storage tank temperature	80.0 °C	PA4 → P12: 20.0 to 90.0 °C
Start temperature for boiler pump	60.0 °C	PA5 → P01: 20.0 to 90.0 °C
Boiler pump hysteresis	5.0 °C	PA5 → P02: 0.0 to 30.0 °C

16.2.6 Summer mode

Summer mode is activated depending on the mean daytime temperature (measured between 7.00 h and 22.00 h) during the adjusted summer time period.

If the mean daytime temperature exceeds the 'Boost' on the number of successive days set in 'No. days until activation', summer mode is activated on the following day. This means that the valves in all heating circuits are closed and the circulation pumps are switched off after t = 2 x valve transit time.

If the mean daytime temperature falls below the 'Limit' on the number of successive days set in 'No. days until deactivation', summer mode is deactivated on the following day.

Function	Default	Configuration
Summer mode	0 01.06 - 30.09 2 1 18.0 °C	CO5 → F04 - 1 Time: Adjustable as required No. days until activation: 1 to 3 No. days until deactivation: 1 to 3 Limit: 0.0 to 30.0 °C

i Note

Summer mode only becomes effective when the controller is in automatic mode (⏲).

16.2.7 Delayed outdoor temperature adaptation

The calculated outdoor temperature is used to determine the flow temperature set point. The heating response is delayed when the outdoor temperature either increases or decreases or both. If the outdoor temperature varies by, for example 12 °C within a very short period of time, the calculated outdoor temperature is adapted to the actual outdoor temperature in small steps (delay time of 3 °C per hour) over the following time period:

$$t = \frac{12\ °C}{3\ °C/h} = 4\ h$$

i Note

The delayed outdoor temperature adaptation helps avoid unnecessary overloads of central heating stations in combination with either overheated buildings occurring, for example due to warm winds or temporarily insufficient heating due to the outdoor sensor being exposed to direct sunshine.

In the operating level, the outdoor temperature reading blinks on the display while delayed outdoor temperature adaptation is active.

A small hour glass appears next to the thermometer on the display when this function is active.

The calculated outdoor temperature is displayed.

Function	Default	Configuration
Delayed outdoor temperature adaptation (decreasing)	0	CO5 → F05 - 1 Delay/h: 0.2 to 6.0 °C
Delayed outdoor temperature adaptation (increasing)	0 3.0 °C	CO5 → F06 - 1 Delay/h: 0.2 to 6.0 °C

16.2.8 Remote operation

Apart from measuring the room temperature, the Type 5257-5 [1] Room Panel, Type 5257-51 Room Panel (Pt1000) and Type 5244 [1] Room Panel (PTC) provide the following opportunities of influencing the control process:

Selecting the operating mode:	◴ Automatic mode ☼ Day mode ☾ Night mode
Set point correction:	During rated operation, the room temperature set point can be increased or reduced by up to 5 °C using a continuously adjustable rotary knob.

With an activated room sensor, the measured room temperature is displayed when the remote operation is connected and activated. Nevertheless, it is not used for control when either the **optimization**, **adaptation** or **flash adaptation** function is activated.

Function	Default	Configuration
Room sensor RF1/RF2	0	CO1, 2 → F01 - 1

[1] No longer available

16.2.9 Optimization

This function requires the use of a room sensor. Depending on the building characteristics, the heating controller determines and adapts the required advance heating time (maximum 8 hours) to ensure that the desired 'Day set point' (rated room temperature) has been reached in the reference room when the time-of-use starts. During the advance heating period, the controller heats with the max. flow temperature. This temperature is built up in steps of 10 °C. As soon as the 'Day set point' has been reached, outdoor-temperature-compensated control is activated.

Depending on the room sensor, the heating controller switches off the heating system up to one hour before the time-of-use ends. The heating controller chooses the deactivation time such that the room temperature does not drop significantly below the desired value until the time-of-use ends.

During the advance heating period and the premature deactivation of the heating system, the ☼ or ☾ icon blinks on the display.

Outside the times-of-use, the heating controller monitors the 'Night set point' (reduced room temperature). When the temperature falls below the night set point, the controller heats with the max. flow temperature until the measured room temperature exceeds the adjusted value by 1 °C.

i Note

- *Direct sunshine can cause the room temperature to increase and thus result in the premature deactivation of the heating system.*
- *When the room temperature decreases while the heating system is shortly outside its times-of-use, this can prematurely cause the controller to heat up to the 'Day set point'.*

Function	Default	Configuration
Room sensor RF1/RF2	0	CO1, 2 → F01 - 1
Outdoor sensor AF1	1	CO1, 2 → F02 - 1
Optimization	0	CO1, 2 → F07 - 1

Parameters	Default	Switch position: value range
Day set point	20.0 °C	🌡☼ 0.0 to 40.0 °C
Night set point	15.0 °C	🌡☾ 0.0 to 40.0 °C

16.2.10 Flash adaptation

To ensure that the controller reacts immediately to room temperature deviations during day and night mode, the function block setting CO1, 2 → F09 - 1 needs to be made.

The heating is then always switched off as soon as the room temperature exceeds the 'Day set point' or 'Night set point' by 2 °C.

Heating first starts again when the room has cooled off and the room temperature is 1 °C above the set point. Corrections of the flow temperature set point are released after the 'Cycle time' or 'Gain K_P' are set to a value ≠ 0. The 'Cycle time' determines the intervals at which the flow temperature set point is corrected by 1 °C. 'Gain K_P' set to ≠ 0 causes a direct increase/decrease in flow temperature set point when a sudden deviation in room temperature arises. A 'Gain K_P' setting of around 10.0 is recommended.

Note

- *Cooling loads, such as drafts or open windows, affect the control process.*
- *Rooms may be temporarily overheated after the cooling load has been eliminated.*

Function	Default	Configuration
Room sensor RF1/RF2	0	CO1, 2 → F01 - 1
Flash adaptation	0	CO1, 2 → F09 - 1
	20 min	Cycle time: 0 to 100 min
	0.0	K_P (gain): 0.0 to 25.0

Parameters	Default	Switch position: value range
Day set point	20.0 °C	🌡☼ 0.0 to 40.0 °C
Night set point	15.0 °C	🌡☾ 0.0 to 40.0 °C

16.2.11 Flash adaptation without outdoor sensor (based on room temperature)

The flow temperature control starts with 'Flow set point (day)' in day mode or with 'Flow set point (night)' in night mode as no set points calculated using characteristics exist without an outdoor sensor. The 'Cycle time' determines the intervals at which the flow temperature set point is corrected by 1 °C. The heating is then always switched off as soon as the room temperature exceeds the 'Day set point' or 'Night set point' by 2 °C.

Heating first starts again when the room has cooled off and the room temperature is 1 °C above the set point. A 'Gain K_P' set to ≠ 0 causes a direct increase/decrease in flow temperature set point when a sudden deviation in room temperature arises. A 'Gain K_P' setting of around 10.0 is recommended.

Function	Default	Configuration
Room sensor RF1/RF2	0	CO1, 2 → F01 - 1
Outdoor sensor AF1	1	CO1, 2 → F02 - 0
Flash adaptation	0	CO1, 2 → F09 - 1
	20 min	Cycle time: 1 to 100 min
	0.0	K_P (gain): 0.0 to 25.0

Parameters	Default	Switch position: value range
Day set point	20.0 °C	🌡☼ 0.0 to 40.0 °C
Night set point	15.0 °C	🌡☾ 0.0 to 40.0 °C

Parameters	Default	Parameter level: value range
Flow set point (day)	+50 °C	PA1, 2 → P03: –5.0 to +150.0 °C
Flow set point (night)	+30.0 °C	PA1, 2 → P04: –5.0 to +150.0 °C

16.2.12 Adaptation

The heating controller is capable of automatically adapting the heating characteristic to the building characteristics.

A gradient characteristic must be set in this case (CO1, 2 → F11 - 0).

The reference room, where the room sensor is located, represents the entire building and is monitored to ensure that the room temperature set point ('Day set point') is maintained. When the mean measured room temperature in rated operation deviates from the adjusted set point, the heating characteristic is modified accordingly for the following time-of-use.

The corrected value is displayed in PA1, 2 → P01 (Flow gradient).

Function	Default	Configuration
Room sensor RF1/RF2	0	CO1, 2 → F01 - 1
Outdoor sensor AF1	1	CO1, 2 → F02 - 1
Adaptation	0	CO1, 2 → F08 - 1
Four-point characteristic	0	CO1, 2 → F11 - 0

Parameters	Default	Switch position: value range
Day set point	20.0 °C	🌡☼ 0.0 to 40.0 °C
Night set point	15.0 °C	🌡☾ 0.0 to 40.0 °C

i Note

If the Flash adaptation function is already configured with a small cycle time, the Adaptation function should not be configured as well.

16.2.13 Cooling control

Cooling control with outdoor sensor

When the cooling control function is activated in a control circuit with outdoor sensor, the four-point characteristic of the corresponding control circuit is automatically activated and the operating direction of the control output is reversed.

In PA1 and/or PA2 the four points for the course of the set point based on the outdoor temperatures can be adjusted separately for day and night mode.

In PA1, PA2 and/or PA3 the four points for the course of the set point based on the outdoor temperatures can be adjusted separately for day and night mode.

The 'Base point for return temperature' that can be adjusted with an active return sensor determines the point at which a minimum limitation of the return temperature starts:

If the measured return temperature falls below this value, the flow temperature set point is raised. The four return temperature values in the four-point characteristic function have no effect.

Function	Default	Configuration
Outdoor sensor AF1	1	CO1, 2 → F02 - 1
Cooling control	0	CO1, 2 → F04 - 1
Four-point characteristic	0	CO1, 2 → F11 - 1

Parameters	Default		Parameter level: value range
Outdoor temperature	Point 1	+5.0 °C	PA1, 2 → P05: –50.0 to +50.0 °C
	Point 2	+15.0 °C	
	Point 3	+25.0 °C	
	Point 4	+35.0 °C	
Flow temperature	Point 1	+20.0 °C	PA1, 2 → P05: –5.0 to +150.0 °C
	Point 2	+15.0 °C	
	Point 3	+10.0 °C	
	Point 4	+5.0 °C	
Reduced flow temperature	Point 1	+30.0 °C	PA1, 2 → P05: –5.0 to +150.0 °C
	Point 2	+25.0 °C	
	Point 3	+20.0 °C	
	Point 4	+15.0 °C	
Base point for return temperature		65.0 °C	PA1, 2 → P13: 5.0 to 90.0 °C

i Note

The limiting factors 'K_P' of the return sensor functions (CO1, 2 → F03) apply during cooling control as well.

Cooling control without outdoor sensor

When the cooling control function is activated in a control circuit without outdoor sensor, only the adjustment limits for the day and night set points at the rotary switch as well as the 'Base point for return temperature' can be adjusted in PA1 and/or PA2.

Function	Default	Configuration
Outdoor sensor AF1	1	CO1, 2 → F02 - 0
Cooling control	0	CO1, 2 → F04 - 1

Parameters	Default	Switch position: value range
Flow set point (day)	+50.0 °C	☼ -5.0 to +150.0 °C
Flow set point (night)	+30.0 °C	☾ -5.0 to +150.0 °C

Parameters	Default	Parameter level: value range
Min. flow temperature	+20.0 °C	PA1, 2 → P06: –5.0 to +150.0 °C
Max. flow temperature	70.0 °C	PA1, 2 → P07: 5.0 to 150.0 °C
Base point for return temperature	65.0 °C	PA1, 2 → P13: 5.0 to 90.0 °C

Note

- *The limiting factors 'K_P' of the return sensor functions (CO1, 2 → F03) apply during cooling control as well.*
- *The request for a signal by downstream control circuits or externally (when a pre-control circuit is used) is based on the maximum selection.*
  Therefore, systems (e.g. system 3.0) or systems in which the demand is requested using a 0 to 10 V signal are not suitable for transmitting the signal for required cooling.
- *The 'Set point boost (pre-control circuit)' parameter can only generate higher and not lower set points in the pre-control circuit.*

16.2.14 Differential temperature control

In systems 1.0 and 16.0, the differential temperature control causes the delivery rate of pump UP1 to be adapted through the 0 to 10 V output depending on the difference between the secondary flow temperature and the secondary return temperature.

In system 1.0, the sensor input RüF2 is automatically activated for this purpose with the CO1 → F23 - 1 setting. In system 16.0, the sensor inputs VF2 and RüF2 are automatically activated. The influence factor K_P determines how strongly the heating controller responds when the temperature deviates from the set point of the differential temperature control.

Function	Default	Configuration
Differential temperature control	0	CO1 → F23 - 1
	20.0 °C	Set point of differential temperature control: 0.0 to 50.0 °C
	1.0	Influence factor K_P: 0.1 to 10.0
	20 %	Minimum speed: 0 to 100 %
AA1 reverse	0	CO5 → F25 - 1
	0 %	Zero: 0 to 50 %
AA1 PWM	0	CO5 → F34 - 0 (TROVIS 5573-1 cannot process a PWM signal) Function: Differential temperature control

16.3 Functions of the DHW circuit

16.3.1 DHW heating in the storage tank system

Start storage tank charging

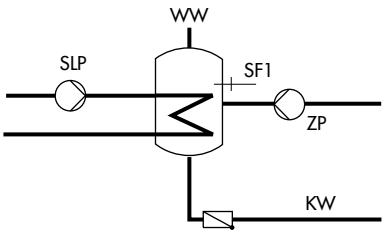

SLP	Storage tank charging pump
SF1	Storage tank sensor
ZP	Circulation pump (DHW)
WW	Hot water
KW	Cold water

Fig. 14: *Schematics of a storage tank system*

The heating controller begins charging the storage tank when the water temperature measured at storage tank sensor SF1 falls below the 'DHW temperature set point' by 0.1 °C. If the flow temperature in the system exceeds the desired charging temperature, the heating controller tries to reduce the flow temperature in the heating circuit for up to three minutes before the storage tank charging pump is activated. When there is no heating operation or when the flow temperature in the system is lower, the storage tank charging pump is directly switched on.

If CO4 → F15 - 1 (**SLP ON depending on return temperature**) is configured, the primary valve is opened without simultaneously operating the storage tank charging pump. The storage tank charging pump is first switched on when the primary return temperature has reached the temperature currently measured at storage tank sensor SF1. This function enables storage tank charging when the heating system is switched off, e.g. in summer mode, without cooling down the storage tank first by filling it with cold flow water. The storage tank charging pump does not start operation before a sufficiently high temperature has been reached at the heat exchanger.

An activated discharging protection function (CO4 → F27 - 1) causes the charging to be stopped when the charging temperature does not reach its set point even though the valve is fully open or it falls below the temperature measured at SF1 and does not rise again.

Charging with the valve fully open is stopped after one hour at the latest.

i Note

The 'DHW temperature set point' is to be regarded in relation to the charging temperature if a storage tank thermostat is used.

Time-controlled switchover of storage tank sensors

By configuring a second storage tank sensor SF2 (CO4 → F19 - 1), it is possible to determine that the storage tank sensor SF1 is used for day mode in the DHW circuit and storage tank sensor SF2 for night mode.

As a result, different storage tank volumes can be kept at a constant temperature according to a time schedule and also at different temperatures if the 'DHW temperature set points' for day and night differ from one another.

Stop storage tank charging

The heating controller stops charging the storage tank when the water temperature measured at storage tank sensor SF1 has reached the temperature T = 'DHW temperature' + 'Hysteresis'. When there is no heating operation or when the flow temperature demand in the system is lower, the corresponding valve is closed. The storage tank charging pump is switched off after t = 'Lag time of storage tank charging pump' x 'Valve transit time'.

With the default settings, the temperature in the storage tank is increased by 5 °C to reach 65 °C when the storage tank temperature falls below 60 °C. The charging temperature is calculated from the DHW temperature (60 °C) +'Charging temperature boost' (10 °C), which equals 70 °C.

Once the storage tank has been charged, the heating valve is closed and the charging pump continues to run for the time t = P06 x Valve transit time. Outside the times-of-use, the storage tank is only charged when the temperature falls below 40 °C ('Night set point for DHW temperature'). In this case, the tank is charged with a charging temperature of 50 °C until 45 °C is reached in the tank.

In this case, the tank is charged with a charging temperature of 50 °C until 45 °C is reached in the tank.

Function	Default	Configuration
Storage tank sensor SF1	-	CO4 → F01 - 1
Storage tank sensor SF2	-	CO4 → F02 (- 1 when CO4 → F019 - 1)
SLP depending on return temperature	0	CO4 → F015 - 1
Switchover	0	CO4 → F19 (-1 only when CO4 → F02 - 1)
Discharging protection	0	CO4 → F27 - 1

Parameters	Default	Switch position: value range
Day set point for 'DHW temperature' and charging temperature with CO4 → F01 - 0 setting	60.0 °C	🌡☼ Min. to max. adjustable DHW set point
Night set point for DHW temperature	40.0 °C	🌡☾ Min. to max. adjustable DHW set point

Parameters	Default	Parameter level: value range
Min. adjustable DHW set point [1]	40.0 °C	PA4 → P01: 5.0 to 90.0 °C
Max. adjustable DHW set point [1]	60.0 °C	PA4 → P02: 5.0 to 90.0 °C
Hysteresis [2]	5.0 °C	PA4 → P03: 0.0 to 30.0 °C
Charging temperature boost [3]	10.0 °C	PA4 → P04: 1.0 to 50.0 °C
Lag time for storage tank charging pump	1.0 °C	PA4 → P19 x valve transit time T_Y: 0.0 to 10.0

1) Parameters serve as limitation of the adjustment range for the DHW temperature to be set at the rotary switch
2) Deactivation value T = DHW temperature + 'Hysteresis'
3) Charging temperature T = DHW temperature + 'Charging temperature boost'

16.3.1.1 DHW circuit additionally controlled by a globe valve

In systems 7.1, 8.1, 9.1, 9.5, 11.1, 12.1, 13.1 and 21.1, the following versions with globe valve can be configured instead of the three-way valve control in the DHW circuit:

In system 11.1, the following version with globe valve can be configured instead of the three-way valve control in the DHW circuit:

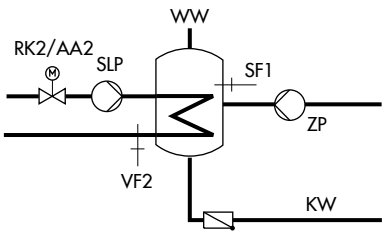

Fig. 15: *Schematics of a storage tank system with a globe valve for return temperature limitation*

RK2/Y2	Control circuit/valve 2
SLP	Storage tank charging pump
SF1	Storage tank sensor
VF2	Flow sensor
ZP	Circulation pump (DHW)
WW	Hot water
KW	Cold water

Globe valve and flow sensor VF2 are used exclusively for return temperature limitation in the schematics shown above. The pre-control circuit provides at least the same flow temperature as in the standard hydraulic schematic version, which is calculated from 'DHW temperature set point' + 'Charging temperature boost' + 'Boost set point of pre-control circuit'.

The functions and parameters of the **DHW heating in the storage tank system** are upgraded by the following settings:

Function	Default	Configuration
Return control	0	CO4 → F20 - 1

Parameters	Default	Parameter level: value range
Max. return temperature	65.0 °C	PA4 → P07: 20.0 to 90.0 °C

16.3.2 DHW heating in the storage tank charging system

Start storage tank charging

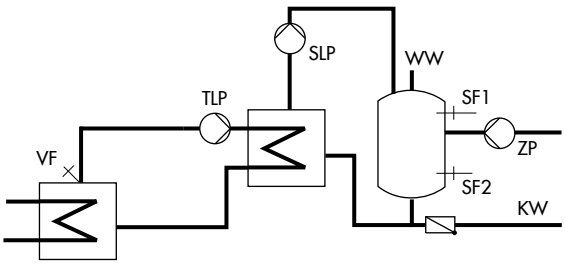

TLP	Heat exchanger charging pump
VF	Flow sensor
SLP	Storage tank charging pump
SF1	Storage tank sensor
SF2	Storage tank sensor
ZP	Circulation pump (DHW)
WW	Hot water
KW	Cold water

Fig. 16: *Schematics of a storage tank charging system*

The heating controller begins charging the storage tank when the water temperature measured at storage tank sensor SF1 falls below the 'DHW temperature set point' by 0.1 °C. If the flow temperature in the system exceeds the desired charging temperature, the heating controller tries to reduce the flow temperature in the heating circuit for up to three minutes before the heat exchanger charging pump together with the storage tank charging pump is activated.

When there is no heating operation or when the flow temperature in the system is lower, the heat exchanger charging pump is directly switched on. If the temperature currently measured at storage tank sensor 1 is reached at the flow sensor VF, the storage tank charging pump is switched on.

The CO4 → F27 - 1 setting to activate the discharging protection function causes the charging to be stopped when the charging temperature does not reach its set point even though the valve is fully open or it falls below the temperature measured at SF1 and does not rise again.

Charging with the valve fully open is stopped after one hour at the latest.

In such cases, 'Operation: discharging protection' is displayed with the measured values in the DHW circuit for the next 30 minutes.

If a storage tank thermostat is used, the storage tank charging pump is switched on when the temperature T = Charging temperature – 5 °C is reached at the flow sensor VF.

i Note

The 'DHW temperature set point' is to be regarded in relation to the charging temperature if a storage tank thermostat is used.

When the flow sensor VF4 is activated, the set point in the heat exchanger circuit is influenced by the system deviation in the storage tank charging circuit upon activation of the storage tank charging pump: if the temperature measured at flow sensor VF4 is lower than the 'Charging temperature', the set point in the heat exchanger circuit is increased in steps of 1 °C.

When the set point in the heat exchanger charging circuit reaches the 'Max. charging temperature', the set point is no longer increased.

'Err 4' error message is generated.

Note

The set point in the heat exchanger circuit which is valid at the end of the charging cycle will be used again at the beginning of the next cycle.

If times-of-use have been programmed for DHW heating, the 'DHW temperature set point' adjusted at the rotary switch is applied during these times-of-use. Outside the times-of-use, the night set point for DHW temperature is used.

This function does not apply when a storage tank thermostat is used.

Time-controlled switchover of storage tank sensors

By configuring a second storage tank sensor SF2 (CO4 → F19 - 1), it is possible to determine that the storage tank sensor SF1 is used for day mode in the DHW circuit and storage tank sensor SF2 for night mode.

As a result, different storage tank volumes can be kept at a constant temperature according to a time schedule and also at different temperatures if the 'DHW temperature set points' for day and night differ from one another.

Stop storage tank charging

The heating controller stops charging the storage tank when the water temperature measured at storage tank sensor SF2 has reached the temperature T = 'DHW temperature' + 'Hysteresis'. To do so, the heat exchanger charging pump is immediately switched off.

When there is no heating operation or when the flow temperature demand in the system is lower, the corresponding valve is closed.

The storage tank charging pump is switched off after the time has elapsed t = P06 x valve transit time.

Function	Default	Configuration
Storage tank sensor SF1		CO4 → F01 - 1
Storage tank sensor SF2		CO4 → F02 - 1
Flow sensor VF	0	CO4 → F05
Switchover	0	CO4 → F19
Discharging protection	0	CO4 → F27 - 1

Parameters	Default	Parameter level: configuration
Day set point for 'DHW temperature' and charging temperature with CO4 → F01 - 0 setting	60.0 °C	Min. to max. adjustable DHW set point
Night set point for DHW temperature	40.0 °C	Min. to max. adjustable DHW set point
DHW temperature sustaining value	40.0 °C	Min. to max. DHW temperature

Parameters	Default	Parameter level: value range
Min. adjustable DHW set point [1)]	40.0 °C	PA4 → P01: 5.0 to 90.0 °C
Max. adjustable DHW set point [1)]	60.0 °C	PA4 → P02: 5.0 to 90.0 °C
Hysteresis [2)]	5.0 °C	PA4 → P03: 1.0 to 30.0 °C
Charging temperature boost [3)]	10.0 °C	PA4 → P04: 0.0 to 50.0 °C
Max. charging temperature	80.0 °C	PA4 → P05: 20.0 to 150.0 °C (only with VF4)
Lag time for storage tank charging pump	1.0	PA4 → P06: 0.0 to 10.0

1) Parameters serve as limitation of the adjustment range for the DHW temperature to be set at the rotary switch.

2) Deactivation value T = DHW temperature + 'Hysteresis'

3) Charging temperature T = DHW temperature + 'Charging temperature boost'

16.3.2.1 Cold charging protection

In system 1.1(-1), the **Cold charging protection** function prevents a storage tank charging from starting until the primary flow temperature is sufficiently high enough. The CO4 → F22 - 1 setting automatically activates the FG2 input to measure the primary flow temperature. If the measured primary flow temperature is lower than the measured storage tank temperature (e.g. due to a supply line that has cooled down at the start of a storage tank charging), the heating circuit valve is moved to the adjusted position at first. The storage tank charging is not released in absolute priority operation until the primary flow temperature has risen enough as a result. Parallel operation must be additionally configured if it is required.

Function	Default	Configuration
Cold charging protection	0	CO4 → F22 - 1
	10 %	Valve position: 1 to 100 %
Parallel pump operation	0	CO4 → F06 - 1
	10 min	Stop: 0 to 10 min
	40.0 °C	Temperature limit: 20.0 to 90.0 °C

16.3.3 DHW heating in instantaneous heating system

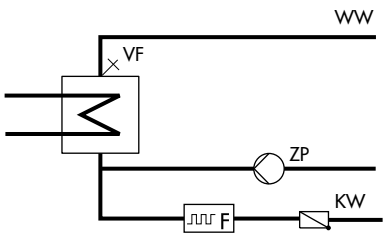

VF	Flow sensor
ZP	Circulation pump (DHW)
WW	Hot water
KW	Cold water
F	Water flow sensor

Fig. 17: *Schematics of an instantaneous heating system*

When the rate of hot water being tapped is not being measured, the control of the required 'DHW temperature' at the flow sensor VF is only active during times-of-use of the circulation pump ZP. To measure the rate of hot water being tapped, the CO4 → F04 - 1 can be used to activate either a flow switch, a water flow sensor (1400-9246) or a vortex flow sensor.

The vortex flow sensor must be powered by an external source (usually 5 V).

A flow switch allows the control of the DHW temperature to be activated outside the times-of-use of the circulation pump.

If the control with water flow sensor or vortex flow sensor is configured, the attenuation in the DHW circuit (CO4 → F13 - 1) is automatically activated and the temperature set to 8 °C. Measuring the rate of hot water being tapped significantly helps optimize the DHW temperature control. When a vortex flow sensor is used to measure the rate of hot water being tapped, enter the 'Lower range value' and 'Upper range value' for

the measuring range settings based on the data provided in the data sheet of the vortex flow sensor. The expected rate of hot water that will actually be tapped is entered in the 'Processing start' and 'Processing end' parameters. If the vortex flow sensor is installed so that it not only measures the flow rate of the cold water but also the circulation flow rate, the 'Processing start' parameter must be used to exclude the measurement of the circulation flow rate. Otherwise, no synchronization can take place.

The 'Sync. valve = 0 min' setting causes the CLOSED position of the control valve to be synchronized after every tapping event. If several tapping events in quick succession are expected to occur in a system, it makes sense to enter long intervals between each synchronization.

The control of the required DHW temperature at the flow sensor VF is only active during times-of-use of the circulation pump ZP.

If a water flow sensor is connected (see Fig. 17), make sure that the function '10 V supply' is configured with the CO5 → F34 setting.

Function	Default	Configuration
Water flow sensor	0	CO4 → F04 - 1 Sensor: Binary = (flow switch at terminals 17/18) Analog (= water flow sensor 1400-9246) Sync. valve: 0 to 60 min (0 min) 0 to 10 V/2 to 10 V (= vortex flow sensor) 0 to 20 mA/4 to 20 mA (= vortex flow sensor; 50 Ω parallel to the analog input) When a vortex flow sensor is used: Analog input 1, 2, 3 (3) Lower range value: 0 to 10 V or 0 to 20 mA (adjustable in steps of 0.1) Lower range value: 0 to 250 l/min (adjustable in steps of 1 l/min) Upper range value: 0.1 to 10 V or 0.1 to 20 mA (adjustable in steps of 0.1) Upper range value: 0 to 250 l/min (adjustable in steps of 1 l/min) Processing start: 0 to 25 l/min (adjustable in steps of 0.1 l/min) Processing end: 0 to 250 l/min (adjustable in steps of 1 l/min) Select: Analog (water flow sensor), Binary (flow switch)
AA1 PWM	0	CO4 → F34 - 0 Function: 10 V supply
ZP on/off cycle mode	0	CO4 → F30 - 1 ON time: 2 to 30 min OFF time: 2 to 30 min

Parameters	Default	Switch position: value range
Day set point for DHW temperature	60.0 °C	🌡☼ Min. to max. adjustable DHW set point
Night set point for DHW temperature	40.0 °C	🌡☾ Min. to max. adjustable DHW set point

Parameters	Default	Parameter level: value range
Min. adjustable DHW set point	40.0 °C	PA4 → P01: 5.0 to 90.0 °C
Max. adjustable DHW set point	60.0 °C	PA4 → P02: 5.0 to 90.0 °C

16.3.4 Domestic hot water with solar system

The systems 1.3 and 2.3 are fitted with a solar system for DHW heating.

In these systems, the difference between the temperatures measured at the storage tank sensor SF2 and the sensor VF3 at the solar collector is determined. The 'Solar circuit pump ON' parameter determines the minimum temperature difference between sensors VF3 and SF2 required to activate the solar circuit pump. If the temperature difference falls below the value of 'Solar circuit pump OFF', the solar circuit pump is switched off. Basically, the solar circuit pump is also switched off when either the water temperature measured at storage tank sensor SF2 has reached the 'Max. storage tank temperature' or when the solar collector temperature rises above 120 °C.

i Note

The times-of-use of the DHW circuit do not affect the operation of the solar system.

After the key number 1999 has been entered, the operating hours of the solar pump are displayed in extended operating level (see Chapter 8).

Parameters	Default	Parameter level: value range
Solar circuit pump ON	10.0 °C	PA4 → P10: 1.0 to 30.0 °C
Solar circuit pump OFF	3.0 °C	PA4 → P11: 0.0 to 30.0 °C
Max. storage tank temperature	80.0 °C	PA4 → P12: 20.0 to 90.0 °C

16.3.5 Intermediate heating

This function can only be activated in systems 2.x, 4.1 and 4.5.

The CO4 → F07 - 1 setting causes the heating operation of the UP1 heating circuit to start again for a period of ten minutes after 20 minutes of priority operation (heating deactivated during DHW heating). The CO4 → F07 - 0 setting is used to give storage tank charging unlimited priority over the heating operation in the UP1 heating circuit.

Function	Default	Configuration
Intermediate heating	1	CO4 → F07 - 1

16.3.6 Parallel pump operation

This function can only be activated in systems 2.1 to 2.1, 4.1 and 4.5.

When CO4 → F06 - 1 is configured, the circulation pump UP1 remains activated during DHW heating.

This does not include operating situations during which the current flow temperature demand of the pump circuit is lower than the adjusted 'Temperature limit'. In this case, the controller applies priority operation, if necessary with intermediate heating. Once a parallel pump operation cycle has been activated and the time period set in 'Stop' has elapsed, system deviations greater than 5 °C cause the controller to suspend parallel operation for ten minutes and to apply priority operation.

'Stop' = 0 min leads to parallel operation once initiated to continue running, regardless of a system deviation.

'Stop parallel pump operation in the event of a system deviation' = 0 min leads to a parallel operation once initiated to continue running, regardless of a system deviation.

Function	Default	Configuration
Parallel pump operation	0 10 min 40.0 °C	CO4 → F06 - 1 Stop: 0 to 10 min Temperature limit: 20.0 to 90.0 °C

16.3.7 Circulation pump during storage tank charging

The CO4 → F11 - 1 setting causes the circulation pump (DHW) to continue operating according to the programmed time schedule even during storage tank charging. By configuring CO4 →-> F11 - 0, the circulation pump is switched off as soon as the storage tank charging pump is activated. The circulation pump starts to operate again according to the time schedule when the storage tank charging pump has been switched off again.

Function	Default	Configuration
Circulation pump operation during storage tank charging	0	CO4 → F11

16.3.8 Priority circuit

The thermal power for DHW must be taken from the heating in cases when the assigned flow rate is insufficient to cover simultaneous operation of both DHW and heating. The priority function 'Stand-by mode' interrupts the heating operation. The priority functions 'Reverse control' and 'Set-back operation' reduce the thermal power for heating operation.

16.3.8.1 Reverse control

In all systems with DHW heating and at least one heating circuit with a control valve, DHW heating can be given priority by applying reverse control. The CO4 → F08 - 1 setting causes the temperature to be monitored at sensor VFx.

In systems without sensor VFx in the DHW circuit, the temperature is monitored directly at storage tank sensor SF1. If system deviations still occur after the time set in 'Start' has elapsed, the set point of the heating circuit with the control valve is gradually reduced each minute until the flow temperature set point has reached 5 °C at the minimum. How strongly the heating controller responds is determined by K_P.

The 'Start' setting = 0 causes the flow temperature set points of the corresponding heating circuits to be immediately reduced to 5 °C. As soon as more thermal power is available than required by the DHW, the flow temperature set points of the heating circuits are raised again.

Examples of systems without sensor VFx in the DHW circuit:

System 4.5 and 11.0

Function	Default	Configuration
Priority (reverse)	0	CO4 → F08 - 1
	2 min	Start: 0 to 10 min
	1.0	K_P (influence factor): 0.1 to 10.0
		Control circuit: HC1, HC2, HC1+HC2 (system 4.5 only)
Priority (set-back)	0	CO4 → F09 - 0
Priority (stand-by)	0	CO4 → F31 - 0

16.3.8.2 Set-back operation

In all systems with DHW heating (except for systems with instantaneous heating system and DHW temperature directly controlled at the storage tank sensor SF1) and at least one heating circuit with a control valve, DHW heating can be given priority by applying set-back operation. The CO4 → F09 - 1 setting causes the temperature to be monitored at sensor VFx in the DHW circuit.

If system deviations still occur after the time entered in 'Start' has elapsed, the selected heating circuits with the control valve are set to reduced operation. The 'Start' setting = 0 causes it to be implemented immediately. As soon as more thermal power is available than required by the DHW, reduced operation is deactivated again.

Function	Default	Configuration
Priority (reverse)	0	CO4 → F08 - 0
Priority (set-back)	0	CO4 → F09 - 1
Priority (stand-by)	0	CO4 → F31 - 0
	2 min	Start: 0 to 10 min
		Control circuit: HC1, HC2, HC1+HC2 (system 4.5 only)

16.3.8.3 Stand-by mode

In all systems with DHW heating (except for systems with instantaneous heating system and DHW temperature directly controlled at the storage tank sensor SF1) and at least one heating circuit with a control valve, DHW heating can be given priority by applying stand-by mode. The CO4 → F31 - 1 setting causes the temperature to be monitored at sensor VFx in the DHW circuit.

If system deviations still occur after the time entered in 'Start' has elapsed, the selected heating circuits with the control valve are set to stand-by mode. The 'Start' setting = 0 causes it to be implemented immediately until the demand for hot water has ended.

Function	Default	Configuration
Priority (reverse)	0	CO4 → F08 - 0
Priority (set-back)	0	CO4 → F09 - 0
Priority (stand-by)	0	CO4 → F31 - 1
	2 min	Start: 0 to 10 min
		Control circuit: HC1, HC2, HC1+HC2 (system 4.5 only)

16.3.9 Forced charging of DHW storage tank

To provide the full network performance for room heating when the time-of-use of the heating circuits begins, any storage tanks are charged one hour before the time-of-use of the heating circuits starts. For the individual heating controller, this means that storage tank charging is activated when the water temperature in the storage tank falls below the adjusted deactivation value of T = 'DHW temperature' + 'Hysteresis'.

To perform the force charging, the time-of-use for DHW must be interrupted for at least 15 minutes when the time-of-use for the heating circuit(s) starts.

Note

This function is not available when a storage tank thermostat is used.

16.3.10 Thermal disinfection of DHW storage tank

In all systems with DHW heating, a thermal disinfection is performed on a selected day of the week or daily.

- In systems with DHW storage tank, it is heated to the adjusted 'Disinfection temperature', taking into account the 'Charging temperature boost' parameter (or 'Set point boost', depending on the system). Disinfection takes place within the adjusted time period ('Time').
- In systems with DHW heating in instantaneous heating system, the function remains active taking into account the Boost parameter until the circulation pipe, measured at storage tank sensor SF1, has reached the adjusted Disinfection temperature, provided disinfection has not been terminated prematurely at the end of the adjusted time period (Time).
- In systems with storage tank charging system, the CO4 → F24 - 1 setting can be used to activate the sensor RüF2 instead of SF1 or SF2 to switch off the thermal disinfection.

The 'Duration' determines how long the disinfection temperature must be maintained within the adjusted time period to rate the process successful. If 'Duration' is set to ≠ 0, no intermediate heating operation takes place during thermal disinfection.

When the 'Disinfection temperature' has not been reached before the end of the thermal disinfection cycle, it is indicated correspondingly on the display. This error message can also be generated prematurely if the remaining time until the disinfection temperature is reached is shorter than the adjusted 'Duration'. The indication is automatically reset when the disinfection temperature is properly reached during the following thermal disinfection cycle.

Thermal disinfection for preventing legionella infection has the following effect:

- High return temperatures during the disinfection cycle (return temperature limitation suspended)
- High DHW temperatures after thermal disinfection has been concluded
- Possibly lime scale, which can have a negative effect on heat exchanger performance.

i Note

This function is not available when a storage tank thermostat is used.

i Note

The forced operation of the circulation pump (DHW) starts while thermal disinfection is active.

Function	Default	Configuration
Storage tank sensor SF1	1	CO4 → F01 - 1
Thermal disinfection	0	CO4 → F14 - 1
Bottom sensor for thermal disinfection		
	Wednesday	Monday, Tuesday, ..., daily
	00:00 - 04:00	Time: Adjustable as required in steps of 15 minutes
	70.0 °C	Disinfection temperature: 60.0 to 90.0 °C
	10.0 °C	Set point boost: 0.0 to 50.0 °C
	0 min	Duration: 0 to 255 min
	ON	Active when binary input (BE) =: ON, OFF (start of disinfection with terminal 03/12 = ON, OFF; only applies when Start time = Stop time)
Bottom sensor for thermal disinfection	0	CO4 → F24 - 1: only when CO4 → F14 - 1 Sensor RüF2 as switch-off sensor active

16.4 System-wide functions

16.4.1 Automatic summer/standard time switchover

The time is automatically changed on the last Sunday in March at 2.00 h and on the last Sunday in October at 3.00 h.

Function	Default	Configuration
Summer time	1	CO5 → F08 - 1

Note

The automatic summer/standard time switchover can also be programmed in the Time/date menu (see Chapter 6).

16.4.2 Frost protection

Frost protection measures are taken when the outdoor temperature falls below 'Limit'. The switching differential to cancel the frost protection measures is always 1 °C.

Restricted frost protection

Frost protection measures are taken only when all heating circuits in the system are in stand-by mode. The circulation pumps are automatically switched on and their flow temperature set points are adjusted to 10 °C. The circulation pump in the DHW circuit is automatically switched on only when the stand-by mode has been adjusted at the rotary switch in all heating circuits. Nevertheless, the storage tank is always recharged to 10 °C if the storage tank temperature falls below 5 °C.

Highest priority for frost protection

The heating circuit circulation pumps are always switched on automatically. The flow temperature set points of all heating circuits currently in stand-by mode are set to +10 °C. In the DHW circuit, the circulation pump is always activated. If the storage tank temperature falls below +5 °C, the storage tank is recharged to +10 °C.

Function	Default	Configuration
Frost protection		CO5 → F09 - 0: Restricted frost protection CO5 → F09 - 1: Highest priority for frost protection
	3.0 °C	Limit: –15.0 to 3.0 °C

Note

Frost protection operation of a pump, a heating circuit or the DHW circuit is only active when the ❄ frost protection icon is displayed.

16.4.3 Forced pump operation

When the heating circuit pumps have not been activated for 24 hours, forced operation of the pumps is started between 12.02 h and 12.03 h. This is done to avoid that the pumps get stuck when they are not operated for long periods of time. In the DHW circuit, the circulation pump is operated between 12.04 h and 12.05 h, the other pumps between 12.05 h and 12.06 h.

16.4.4 Return temperature limitation

The temperature difference between the flow and return in a network indicates how well the energy is used: the greater the difference, the higher the efficiency. A return sensor is sufficient to evaluate the temperature difference when the flow temperatures are predefined. The return temperature can be limited either to a value depending on the outdoor temperature (variable) or to a fixed set point. When the temperature measured at return sensor RüF exceeds the current return temperature limit, the set point of the flow temperature (flow temperature of the heating system, charging temperature) is reduced. This causes the primary flow rate to be reduced and the return temperature to drop.

System 2.x and 4.1

The 'KP (limiting factor)' determines how strongly the heating controller responds when the limit values are exceeded in either direction (PI algorithm).

The 'K_P (limiting factor)' determines how strongly the heating controller responds when the limit values are exceeded in either direction (PI algorithm).

If just the proportional component is to be implemented, configure CO5 → F16 - 1. This allows the integral-action component in the return temperature limitation algorithm of all control circuits of the heating controller to be deactivated. The set point reading (flow temperature of the heating, charging temperature) of the control circuit concerned blinks to indicate that a return temperature limitation is active.

i Note

When outdoor-temperature-compensated control with gradient characteristic is used, the return temperature is limited to a fixed value by equating the 'Base point for return temperature' and 'Max. return temperature' (PA1, 2 → P13 and P14) parameters.

Function	Default	Configuration
Return sensor RüF1/2		CO1, 2, 4 → F03 - 1
	1.0	K_P (limiting factor): 0.1 to 10.0
Return temperature limitation with P algorithm [1)]	0	CO5 → F16

1) If the heating controller indicates CO5 → F00 - 1, any access to the return, flow rate and power settings is locked.

Parameters	Default	Parameter level: value range
Return gradient	1.2	PA1, 2 → P11: 0.2 to 3.2
Return level	0.0 °C	PA1, 2 → P12: –30.0 to 30.0 °C
Base point for return temperature	65.0 °C	PA1, 2 → P13: 5.0 to 90.0 °C
Max. return temperature	65.0 °C	PA1, 2 → P14: 5.0 to 90.0 °C

or:

Parameters	Default	Parameter level: value range
Return temperature, points 1 to 4	65.0 °C	PA1, 2 → P05: 5.0 to 90.0 °C

Note

To ensure the entered return temperature limit can be kept, observe the following:

- ⇨ *Do not adjust the heating characteristic to ascend too steeply.*
- ⇨ *The speed of the circulation pumps is not set too high.*
- ⇨ *The heating systems have been balanced.*

16.4.5 Condensate accumulation control

⇨ Activate the **Damping** function to start up condensate accumulation plants, in particular to avoid problematic excess temperatures.

The heating controller response to set point deviations which cause the primary valve to open is attenuated. The heating controller response to set point deviations which cause the control valve to close remains unaffected.

Note

The Condensate accumulation control function can only be activated when the control circuit concerned is controlled using a PI algorithm (three-step control).

Function	Default	Configuration
Control mode	1	CO1, 2, 4 → F12 - 1
Damping	0	CO1, 2, 4 → F13 - 1
	3.0 °C	Max. system deviation: 3.0 to 10.0 °C

16.4.6 Three-step control

The flow temperature can be controlled using a PI algorithm. The valve reacts to pulses that the heating controller sends when a system deviation occurs. The length of the first pulse, in particular, depends on the extent of the system deviation and the selected 'K_P (gain)' (the pulse length increases as K_P increases). The pulse and pause lengths change continuously until the system deviation has been eliminated.

The pause length between the single pulses is greatly influenced by 'Reset time T_n' (the pause length increases as T_n increases). The 'Valve transit time T_Y' specifies the time required by the valve to travel through the range of 0 to 100 %.

Function	Default	Configuration
Control mode	1	CO1, 2, 3, 4, 11, 12, 13 → F12 - 1
	2.0	K_P (gain): 0.1 to 50.0
	120 s	T_n (reset time): 1 to 999 s
	0 s	T_V (derivative-action time): **Do not change the value**.
	35 s	T_Y (valve transit time): 15, ..., 240 s

16.4.7 On/off control

The flow temperature can be controlled, for example by activating and deactivating a boiler. The heating controller switches on the boiler when the flow temperature falls below the set point by T = 0.5 x 'Hysteresis'. When the set point is exceeded by T = 0.5 x 'Hysteresis', the boiler is switched off again. The greater the value for 'Hysteresis', the less frequent switching on and off will be. By entering the 'Minimum ON time', an activated boiler remains switched on during this period regardless of the flow temperature fluctu-

ations. Similarly, a deactivated boiler remains switched off regardless of the flow temperature fluctuations if the 'Min. OFF time' has been specified.

Function	Default	Configuration
Control mode	1	CO1, 2, 4 → F12 - 0
	5.0 °C	Hysteresis: 1.0 to 30.0 °C
	2 min	Min. ON time: 0 to 10 min
	2 min	Min. OFF time: 0 to 10 min

16.4.8 Continuous control

The flow temperature can be controlled using a PID algorithm. The valve receives an analog 0 to 10 V signal from the heating controller. When a system deviation occurs, 'Gain K_P' immediately causes the 0 to 10 V signal to change (the greater the K_P, the greater the change). The integral component becomes effective with time: 'Reset time T_n' represents the time which elapses until the integral component has changed the output signal to the same extent as the immediate change performed by the proportional component (the greater T_n is, the slower the rate of change will be). Due to the derivative component, any change of the system deviation is incorporated into the output signal with a certain gain (the greater the derivative-action time T_V is, the stronger the change will be).

Function	Default	Configuration
Control mode	1	CO1 → F12 - 1
	2.0	K_P (gain): 0.1 to 50.0
	120 s	T_n (reset time): 1 to 999 s
	0 s	T_V (derivative-action time): 0 to 999 s
	35 s	T_Y (valve transit time): 15, 20, 25, ..., 240 s

16.4.9 Releasing a control circuit/heating controller with binary input

The release of an individual control circuit or the heating controller with the binary input only becomes effective when the respective control circuit is in automatic mode (⏲ icon). The released control circuit always works in automatic mode; the deactivated control circuit behaves as if it were transferred to stand-by mode. It remains active, however, in any case for processing an external demand. The control circuit can be released over the binary input when the binary input is either a make contact ('Active when binary input (BE)' = OFF) or a break contact ('when binary input (BE)' = ON).

i Note

- *In systems with downstream heating circuit without a valve (systems 2.x, 4.x), the binary input BE1 only influences the operation of this heating circuit when 'Release control circuit' is configured, whereas the operation of the entire heating controller (including the control circuits of the connected TROVIS I/O expansion modules; excluding the processing of external demand) is influenced when 'Release controller' is configured.*
- *In system 3.0, the binary input BE15 influences the operation of the entire heating controller (except for processing an external demand) when 'Release control circuit' is configured.*
- *In buffer tank systems 15.x and 16.x, the binary input BE15 influences only the operation of the buffer tank charging circuit when 'Release control circuit' is configured.*

Function	Default	Configuration
Release	0	CO1, 2, 3 → F14 - 1
Release controller	0	CO5 → F15 - 1
1) Active when BI = ON, OFF		

16.4.10 Speed control of the charging pump

This function allows the delivery rate of the charging pump in systems with buffer tank (CO1 → F21 - 1) and in systems with DHW storage tank (CO4 → F21 - 1) to be varied based on the temperature. When this function is activated, the input SF2 is automatically activated. In combination with the CO1 → F06 - 0 or CO4 → F02 - 0 setting, this input is only used for speed control and not to stop the storage tank charging.

All storage tank charging actions start with the minimum delivery rate of the charging pumps. As soon as the charging temperature is nearly reached, the delivery rate of the charging pump is increased and the valve controls the flow rate. This occurs until the maximum delivery rate setting is reached. If the charging temperature drops 5 °C below its associated set point, the delivery rate is reduced again.

At the latest when the temperature at the sensor SF2 for speed control has reached the 'Start' value to reduce the delivery rate, the linear reduction of the delivery rate based on the temperature at the sensor SF2 for speed control starts. If the temperature at the sensor SF2 for speed control reaches the 'Stop' value to reduce the delivery rate, the charging pump runs again at the minimum delivery rate. Following the lag time, the charging pump is deactivated when the storage tank is fully charged.

Function	Default	Configuration
Speed control of the charging pump	0	CO1 → F21 - 1 or CO4 → F21 - 1
	40.0 °C	Start speed reduction - SF2 limit: 5.0 to 90.0 °C
	50.0 °C	Stop speed reduction, limit: 5.0 to 90.0 °C
	20 %	Minimum speed: 0 to 50 %
	100 %	Maximum speed: 0 to 100 %
AA1 reverse	0	CO5 → F25 - 1
	0 %	Zero: 0 to 50 %
AA1 PWM	0	CO5 → F34 - 0
		(TROVIS 5573-1 cannot process a PWM signal)
		Function: SLP speed

16.4.11 Processing an external demand

The heating controller can process binary or analog requests for an externally required signal by a more complex secondary system.

A binary request can only be processed when the input SF2 or RF2 is not assigned.

The 'Demand processing limit' parameter limits the flow temperature demand for control circuits RK1 or RK2, which is received over a 0 to 10 V signal.

NOTICE

Risk of damage of the heating circuit through overheating.

Overheating may occur in the heating circuits of the primary controller without control valve.

Excessive charging temperatures in DHW circuits without control valve controlled by the primary controller are excluded when the default settings of the heating controller are used: while storage tank charging is active, no flow temperature higher than the charging temperature is used by the primary controller.

If the **Priority for external demand** function is activated, the external demand is also processed during storage tank charging.

The heating circuits can be configured in such a way that they only process external demand. The possible settings for each heating circuit do not apply with this configuration as only the external demand is processed with associated UP as feeder pump.

Function	Default	Configuration
Priority for external demand	0	CO4 → F16 - 1
Demand only	0	CO1 → F24 - 1
	0	CO2 → F24 - 1

Parameters	Default	Parameter level: value range
Demand processing limit	0	PA1, 2, 3: 5.0 to 150 °C

Binary demand processing

Regardless of the operating mode set for the control circuit, except for manual mode, the controller regulates the flow temperature when either the binary input (terminals 03/12) is a make contact ('Active when binary input' = OFF) or a break contact ('Active when binary input' = ON) in control circuit RK1 to at least the adjusted flow temperature adjusted in PA1 → P10 ('Minimum flow temperature set point HC for binary demand processing').

Function	Default	Configuration
Demand processing, 0 to 10 V	0	CO1, 2 → F16 - 0
Binary demand processing	0	CO1 → F17 - 1
	ON	Active when binary input (BE) = ON, OFF

Parameters	Default	Parameter level: value range
Minimum flow temperature set point HC for binary demand processing	40.0 °C	PA1 → P10: 5.0 to 150.0 °C

Demand processing, 0 to 10 V

Regardless of the operating mode set for the control circuit concerned (except for manual mode), the controller regulates the flow temperature at least to the temperature corresponding with the 0 to 10 V signal connected to terminals 11/12.

Function	Default	Configuration
Demand processing, 0 to 10 V	0	CO1, 2 → F16 - 1
AE1 zero shift	0	CO5 → F31 - 0
	0 °C	Lower transmission range: 0 to 150 °C
	120 °C	Upper transmission range: 0 to 150 °C
	0	CO5' → F07 - 1
	5 %	CO5 → F31 - 1
	0 °C	Zero: 5 to 20 %
	120 °C	Lower transmission range: 0 to 150 °C
		Upper transmission range: 0 to 150 °C
AA1 PWM	0	CO5 → F34 - 0
		Function: 0 to 10 V input
Binary demand processing	0	CO1 → F17 - 0

16.4.12 External demand using a 0 to 10 V signal

The heating controller can request a demand for the maximum flow set point (with boost, if need be) by issuing an analog 0 to 10 V signal for external demand.

For this purpose, the 0 to 10 V output is used as an alternative to issuing the control signal.

Analog or binary demand processing are integrated into the analog request for an external demand.

Function	Default	Configuration
External demand	0	CO1 → F18 - 1
	0.0 °C	Lower range value: 0.0 to 150.0 °C
	120.0 °C	Upper range value: 0.0 to 150.0 °C
	0.0 °C	Boost: 0.0 to 30.0 °C
AA1 PWM	0	CO5 → F34 - 0
		Function: 0 to 10 V input

16.4.13 Power limitation in RK1

The power can be limited based on a pulse signal up to 800 pulse/h at BE2.

Three different operating situations exist:

- A system with simultaneous room and DHW heating requires maximum energy.
- A system with a fully charged storage tank that is only used for room heating requires less energy.
- A system that suspends room heating during DHW heating requires less energy.

As a result, three different maximum limit values can be adjusted:

- 'Max. limit' to determine the absolute upper limit
- 'Max. limit (heating)' to operate room heating only
- 'Max. limit (DHW)' to operate DHW heating only

In all systems without DHW heating or without heating circuit, only the max. limit for power can be specified. If the 'Max. limit' or 'Max. limit (heating)' parameter is set to 'OT', a four-point characteristic configured in CO1 → F11 - 1 allows the input of four power limits for outdoor-temperature-compensated power limitation in addition to the outdoor, flow and return temperature values.

All limits are adjusted as pulses per hour (pulses/h). As the reading for the current pulse rate P in pulse/h (see Chapter 8 concerning extended operating level, key number 1999) is calculated based on the time interval between incoming pulses, the heating controller naturally cannot react immediately to every sudden power change in the system. The flow set point of the control circuit RK1 is reduced when the pulse rate reaches the currently valid maximum limit. The 'Limiting factor' determines how strongly the controller responds.

Example to determine the limit:
If a thermal power of 30 kW is to be limited, the following limit must be set in a heat meter, which issues one pulse per kilowatt hour:

$$P = \frac{30\ \text{kW}}{1\ \text{kWh/pulse}} = 30\ \text{pulse/h}$$

Note

If the heating controller indicates CO5 → F00 - 1, any access to the return, flow rate and power settings is locked.

Function	Default	Configuration
Power limitation in RK1	0	CO5 → F10 - 1
	15 pulse/h	Max. limit: OT to 800 pulses/h
	15 pulse/h	Max. limit (heating): OT to 800 pulses/h
	15 pulse/h	Max. limit (DHW): 1 to 800 pulses/h
	1.0	Limiting factor: 0.1 to 10.0
Power limitation in RK1 by meter bus	0	CO6 → F12 - 0

16.4.14 Creep feed rate limitation with a binary input

It is possible to report to the heating controller when the creep feed rate has fallen below a certain level by using a limit switch of the primary valve connected to the terminals 04/12 or to RüF1. Either the break contact (BI = 0) or break contact (BI = 1) at the binary input can be configured at terminals 04/12 to indicate that the creep feed rate has fallen below a certain level.

Only the binary input as make contact at RüF1 can be processed. Shortly after the alert, the heating controller closes the valve RK1. As soon as the flow temperature falls below the set point by more than 5 °C after the valve has been closed, control operation is started again.

Function	Default	Configuration
Creep feed rate limitation	0	CO5 → F12 - 1
	Binary	Switching mode: Binary (terminals 04/12), Analog (RüF1)
	ON	Active when BI = ON, OFF

16.4.15 Connecting potentiometers for valve position input

The FG1 and FG2 inputs can be used to connect potentiometers (e.g. to input valve positions) when a resistance room sensor is not configured in the control circuit concerned.

The measured values in the ranges from 0 to 2000 Ω are displayed as measured value 9 (FG1) and 10 (FG2). They are available as Modbus data points.

Function	Default	Configuration
Room sensor RF1, 2	0	CO1, 2 → F01 - 0

16.4.16 Locking manual level

To protect the heating system, this function can be used to lock the manual level. When this function has been activated, automatic mode is started when the rotary switch is set to in automatic mode.

Function	Default	Configuration
Lock manual level	0	CO5 → F21 - 1

16.4.17 Locking the rotary switch

When this function has been activated, the heating controller remains in automatic mode regardless of the rotary switch position. The rotary switch can no longer be used to adjust the controller settings.

It is still possible to enter the key number.

Function	Default	Configuration
Lock rotary switch	0	CO5 → F22 - 1

16.4.18 Feeder pump operation

In the systems listed below, the feeder pump UP1 only starts to operate in the default setting when a flow temperature demand of a secondary controller exists:

System 3.0 and 16.1

If CO5 → F14 - 1 is configured, this is also the case when the control circuit RK2 requires heat.

Function	Default	Configuration
Operation UP1	0	CO5 → F14 - 1

16.4.19 On/off cycle mode of the circulation pump (ZP)

The CO4 → F30 - 1 setting allows an on/off cycle mode for the circulation pump (ZP) to be configured. The circulation pump (DHW) alternates between the times programmed in 'ON time' and 'OFF time' during the times-of-use of the circulation pump (DHW). 'CLK' instead 'OFF' is displayed while the 'OFF time' is active for the operation of the circulation pump (DHW).

Function	Default	Configuration
ZP on/off cycle mode	0	CO4 → F30 - 1
ON time	10 min	2 to 30 min
OFF time	10 min	2 to 30 min

16.4.20 External demand for heat due to insufficient heat supply

An external heat source can be demanded using the 0 to 10 V output. The CO1 → F18 - 1 function block for a request for external demand is automatically set. The function block parameters allow the transmission range to be determined. When a system deviation in RK1 greater than 10 °C lasts longer than 30 minutes, a voltage signal corresponding to the actual demand is generated. At the same time, the RK1 valve is forced to close.

After 30 minutes, the external demand for heat is canceled and the control signal output in RK1 is enabled again.

Function	Default	Configuration
Demand for external heat	0	CO1 → F20 - 1
External demand	0	CO1 → F18 - 1
	0.0 °C	Lower range value: 0.0 to 150 °C
	120.0 °C	Upper range value: 0.0 to 150 °C
	0.0 °C	Boost: 0.0 to 30 °C
AA (terminals 11/12) PWM	0	
AA1 PWM	0	CO5 → F34 - 0 Function: External demand

16.5 Communication

The TROVIS 5573-1 Heating and District Heating Controller can communicate with a control system using the optional RS-485 communication module (Modbus RTU interface for two-wire bus networks). In combination with a suitable software for process visualization and communication, a complete control system can be implemented.

Note

The operating software can be updated over a data cable, provided Modbus has been activated (CO6 → F01 - 1).

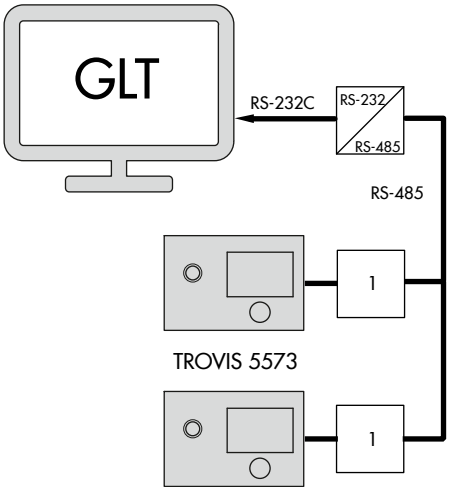

Fig. 18: *Network structure*

1 Optional RS-485 communication module

16.5.1 RS-485 communication module

When looking onto the controller front, the connection for the optional communication module RS-485 is located on the left side of the controller housing (RJ-45 port).

The bus line links the control units/devices in an open ring. At the end of the bus line, the data cable is connected to the control station using an RS-485 to RS-232 converter (e.g. #CoRe02).

The maximum range of the bus connection (cable length) is 1200 meters. For greater distances, repeaters (e.g. CoRe02) must be used to regenerate the signal level. A maximum of 246 devices with 8-bit addressing can be connected to a bus.

If no communication is established between the control system and controller, the time of access by the control system can be restricted to dynamic process by the **monitoring** function. The controller resets the monitoring function, provided the valid Modbus requests are registered. However, in case of an error, all level bits are initialized back to “autonomous” after 30 minutes have elapsed.

NOTICE

Risk of damage of the heating circuit due to lightning or overvoltage.

⇨ *Upon installation, observe the relevant standards and regulations governing lightning and overvoltage protection.*

Function	Default	Configuration
Modbus	1	CO6 → F01 - 1
16-bit address	0	CO6 → F02
Monitoring	0	CO6 → F07

Parameters	Default	Parameter level: value range
Modbus station address (8 bit)	255	PA6 → P01: 1 to 247 When CO6 → F02 - 1: 1 to 32000

Description of communication parameter settings

- Modbus station address (8 bit)
  This address is used to identify the heating controller in bus mode.
  In a system, each controller needs to be assigned a unique address.

16.5.2 Meter bus

The TROVIS 5573-1 Heating and District Heating Controller is fitted with an M-Bus interface for up to three M-Bus units according to EN 13757.

Flow rate and/or power limitations in RK1 or RK2 control circuit is possible on the basis of the values measured by heat meter HM1 and HM2.

i Note

Details on the use of the different heat or water meters can be found in the technical documentation TV-SK 4000179038.

16.5.2.1 Activating the meter bus

To successfully transfer data from the heat meter, the heat meter must use a standardized protocol in accordance with EN 13757. It is not possible to provide a general list of the exact data that can be accessed.

⇨ Contact SAMSON for more information.

All necessary function block parameters to set up the communication with heat meters are available in CO6 → F10.

The meter bus address, model code and reading mode must be specified for the heat meters HM 1 to HM 3.

A meter bus address must be unique and correspond with the address entered in the heat meter. If the meter bus address is unknown, a single heat meter connected to the controller can be assigned the meter bus address 254. The address 255 deactivates the communication with the respective heat meter. The model to be set for the heat meter can be found in TV-SK 4000179038. In general, the default setting of 1434 can be used for most devices.

The following options are available for reading out meters:

- Automatic read-out approx. every 24 hours
- Continuous read-out
- Read-out when the coils (= Modbus data points) assigned to the heat meters are overwritten with the value 1 over the system bus interface

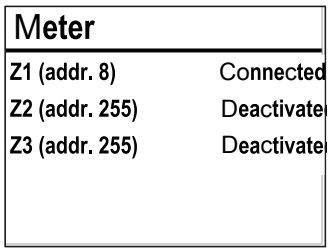

In the extended operating level, the additional 'Meter' screen is displayed, which includes the connection status for meters 1 to 3 when the meter bus is activated. When 'Connected' status is displayed, the following data for each meter can be read by pressing the rotary pushbutton:

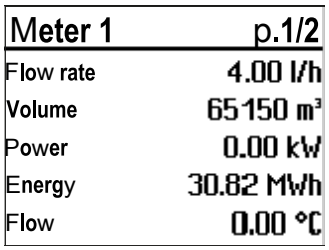

- Flow rate
- Volume
- Power
- Energy
- Flow temperature (Flow)

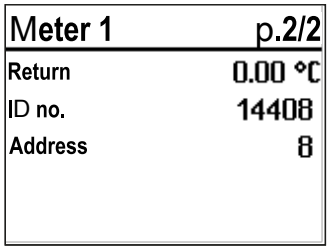

- Return temperature (Return)
- Meter ID
- Meter bus address (address, sent by heat meter)

Function	Default	Configuration
Meter bus	0 255 1434 Cont. Tar-A	CO6 → F10 - 1 HM 1...3 address: 0 to 255 HM1...3 model: EN1434, Multical3, Apator, SLS/WSF HM1...3 mode: 24h, Cont., Coil Tariff: Tar-A, Tar-E (tariff schedule ON, OFF; only for HM1 with 'EN1434' and 'Cont.' settings) Tar-E: the consumption data are assigned to a high tariff or a low tariff depending on the time schedule programmed in the customer level. Three time periods can be entered per day of the week (not vacations or public holidays): 1-7 daily, 1 = Monday, 2 = Tuesday, ..., 7 = Sunday

16.5.2.2 Flow rate and/or power limitation with meter bus

The refreshing rate of the measured variable (**flow rate** and/or **power**) must be less than fives seconds to ensure that the limitation can be performed properly. Note that some makes, particularly battery-operated heat meters, respond with communication pauses when they are read too frequently. Others might run out of energy early.

- A system with simultaneous room and DHW heating requires maximum energy.
- A system with a fully charged storage tank that is only used for room heating requires less energy.
- A system that suspends room heating during DHW heating requires less energy.

As a result, three different maximum limit values for RK1 can be adjusted in all systems with only one control valve and DHW heating on the secondary side:

- Max. limit to determine the absolute upper limit
- Max. limit (heating) to operate room heating only
- Max. limit (DHW) to operate DHW heating only

If the 'Max. limit' or 'Max. limit (heating)' parameter for HC1 is set to 'OT', a four-point characteristic configured with CO1 → F11 - 1 allows the input of four flow rate or power limits for outdoor-temperature-compensated flow rate or power limitation in addition to the outdoor, flow rate and return temperature values. In all systems with two or three control valves, separate maximum limit values can be adjusted for the flow rate and power.

Flow rate limitation

All necessary function block parameters to set up the flow rate limitation are available in CO6 → F11 or CO6 → F13 and CO6 → F15 for the second and third control circuit. One after the other, the system's max. limit or max. limit (heating) and max. limit (DHW) for systems with only one primary control valve and secondary DHW heating have to be set. The 'Limiting factor' determines how strongly the heating controller responds when the limit values are exceeded in either direction.

When the flow rate limitation is activated, the respective measured values and limits are displayed in the extended operating level after confirming the the system scheme.

i Note

If the heating controller indicates CO5 → F00 - 1, any access to the return, flow rate and power settings is locked.

Function	Default	Configuration
Meter bus	0	CO6 → F10 - 1
	255	HM 1...3 address: 0 to 255
	1434	HM1...3 model: EN1434, Multical3, Apator, SLS/WSF
	Cont.	HM1...3 mode: 24 h, Cont., CoiL
Flow rate limitation in RK1	0	CO6 → F11 - 1
	1.5 m^3/h	Max. limit: OT, 0.01 to 650 m^3/h
	1.5 m^3/h	Max. limit (heating): OT, 0.01 to 650 m^3/h
	1.5 m^3/h	Max. limit (DHW): 0.01 to 650 m^3/h
	1.0	Limiting factor: 0.1 to 10.0
Flow rate limitation in RK2	0	CO6 → F13 - 1
	1.5 m^3/h	Max. limit: 0.01 to 650 m^3/h
	1.0	Limiting factor: 0.1 to 10.0

Power limitation

All necessary function block parameters to set up the power limitation are available in CO6 → F12 and CO6 → F14 for systems with two control valves.

One after the other, the system's max. limit or max. limit (heating) and max. limit (DHW) for systems with only one primary control valve and secondary DHW heating have to be set. The 'Limiting factor' determines how strongly the heating controller responds when the limit values are exceeded in either direction. When the power limitation is activated, the respective measured values and limits are displayed in the extended operating level after confirming the system scheme (see Chapter 8).

i Note

If the heating controller indicates CO5 → F00 - 1, any access to the return, flow rate and power settings is locked.

Function	Default	Configuration
Meter bus	0	CO6 → F10 - 1
	255	HM 1...3 address: 0 to 255
	1434	HM1...3 model: EN1434, Multical3, Apator, SLS/WSF
	Cont.	HM1...3 mode: 24 h, Cont., CoiL
Power limitation in RK1	0	CO6 → F12 - 1
	1.5 kW	Max. limit: OT, 0.1 to 6500 kW
	1.5 kW	Max. limit (heating): OT, 0.1 to 6500 kW
	1.5 kW	Max. limit (DHW): 0.1 to 6500 kW
	1.0	Limiting factor: 0.1 to 10.0
Power limitation in RK2	0	CO6 → F14 - 1
	1.5 kW	Max. limit: 0.1 to 6500 kW
	1.0	Limiting factor: 0.1 to 10.0

16.5.3 Memory module/mini module

The use of a memory module or mini module (see Chapter 17.1) is particularly useful to transfer all data from one TROVIS 5573-1 Heating Controller to several other TROVIS 5573-1 Heating Controllers.

i Note

In contrast to the memory module, the mini module is not suitable for transferring the programmed vacations to the individual control circuits or a data logging configuration programmed in TROVIS-VIEW.

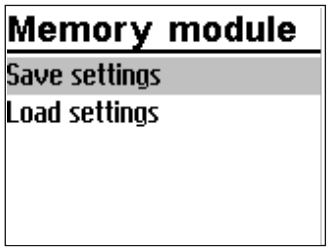

The memory module/mini module is plugged into the RJ-45 connector socket located at the side of the controller.
Once the module has been connected, 'Save settings' appears on the display of the heating controller.
If the memory module already contains data from a different TROVIS 5573-1 Controller, turn the rotary pushbutton until 'SP 73' is displayed.

- Pressing the rotary pushbutton to confirm 'Save settings' causes the controller settings to be transferred to the memory module/mini module.
- Pressing the rotary pushbutton to confirm 'Load settings' causes the controller settings to be transferred from the memory module/mini module.

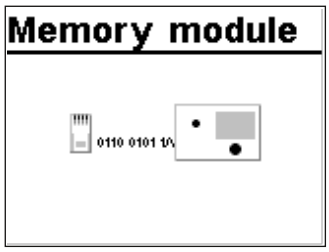

During data transfer, the zeros and ones run across the display. When the transfer was successful, 'OK' is displayed. After that, the connection between controller and memory module/mini module can be terminated.
TROVIS-VIEW allows users to configure all controller settings on a convenient user interface at the computer and to document these settings.

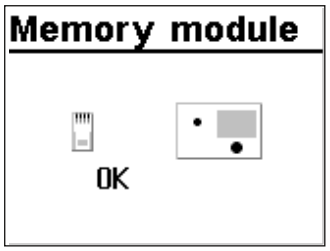

The controller starts to write over the oldest data as soon the memory of the data logging module is full after approximately eight days.

The current memory capacity of the data logging module can be read in the extended operating level under 'Logging memory' as the second value in the sequence (range of values: 0 to 6035).

Directly after inserting the data logging module, data can be first read after the first scanning cycle has been performed.

---

i Note

The internal memory of the controller is full after approx. 14 days. After that, the controller starts to write over the oldest data.

The data log viewer software allows the data to be viewed in graph format. The USB converter 3 (see Chapter 17) is required to connect the data logging module to a computer. The data log viewer software is supplied together with the USB converter 3.

16.5.4 Data logging

A data logging module (see Chapter 17) saves the following controller data every two minutes:

- Temperatures measured by the sensors
- Control signals in %
- Switching states of the pump outputs

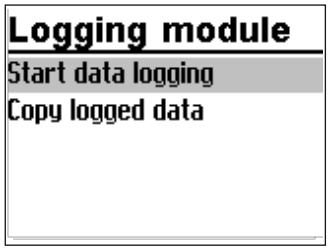

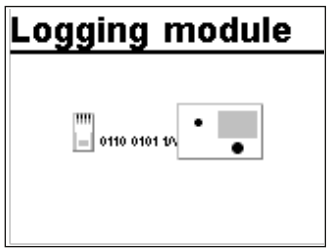

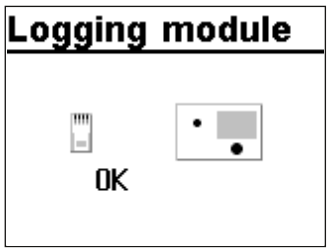

The data logging module is plugged into the RJ-45 connector socket located at the side of the controller.
Once the module has been connected, 'Start data logging' and 'Copy logging data' appear on the controller display.
Pressing the rotary pushbutton to confirm 'Start data logging' causes the above listed operating values to be saved cyclically to the inserted data logging module. The controller display returns to the reading indicated when the data logging module was connected.
Pressing the rotary pushbutton to confirm 'Copy logging data' causes already logged data to be transferred from the memory controller to the data logging module. During data transfer, the zeros and ones run across the display. When the transfer was successful, 'OK' is displayed. After that, the connection between controller and data logging module can be terminated.

16.6 Function block lists

CO1: RK1 - Heating circuit 1

F	Function	Default	Systems	Comments Function block parameters: value range (default setting)
01	Room sensor	0	Not systems 1.5, 1.6, 3.x, 16.x	CO1 → F01 - 1: Room sensor RF1 Temperature reading and FG1 input for Type 5244, 5257-5 or 5257-51 Room Panel active
02	Outdoor sensor	0	1.5, 1.6	CO1 → F02 - 1: Outdoor sensor AF1 Outdoor-temperature-compensated control active
		1	Not systems 1.5, 1.6	
03	Return sensor	0	1.2	CO1 → F03 - 1: Return sensor RüF1; limitation function active **Function block parameters** K_P (limiting factor): 0.1 to 10.0 (1.0)
		1	Not system 1.2	
04	Cooling control	0	Not system 1.9	CO1 → F04 - 1: Cooling control (only when CO1 → F11 - 1) The cooling control function causes a reversal of the operating direction and a minimum limitation of the return temperature in RK1.
05	Underfloor heating	0	Not systems 1.5, 1.6, 3.x, 16.x	CO1 → F05 - 1: Underfloor heating/drying of jointless floors **Function block parameters** Boost: 0.0 to 50.0 °C (0.0 °C) Start temperature: 20.0 to 60.0 °C (25 °C) Hold (days): 0 to 10 days (0 days) Temp. rise/day: 0.0 to 20.0 °C (5.0 °C) Maximum temperature: 25.0 to 60.0 °C (45.0 °C) Hold (days): 0 to 30 days (4 days) Temp. reduction/day: 0.0 to 20.0 °C (0.0 °C) Start condition: Stop, Start, Hold, Reduction
06	Storage tank sensor SF2	1	System 16.x only	CO1 → F06 - 1: Activate SF2 to switch off charging of the buffer tank
07	Optimization	0	Not systems 1.5, 1.6, 3.x, 16.x	CO1 → F07 - 1: Optimization of heating times (only when CO1 → F01 - 1, CO1 → F02 - 1 and CO1 → F29 - 0)
08	Adaptation	0		CO1 → F08 - 1: Heating characteristic adaptation (only when CO1 → F01 - 1, CO1 → F02 - 1 and CO1 → F11 - 0)
09	Flash adaptation	0		CO1 → F09 - 1: Flash adaptation of flow temperature (only when CO1 → F01 - 1) **Function block parameters** Cycle time: 0 or 1 to 100 min (20 min) K_P (gain): 0.0 to 25.0 (0.0)
11	Four-point characteristic	0	Not systems 1.5, 1.6	CO1 → F11 - 1: Four-point characteristic (only when CO1 → F08 - 0) CO1 → F11 - 0: Gradient characteristic
12	Three-step control mode	1	Not system 1.9	CO1 → F12 - 1: Three-step control **Function block parameters** K_P (gain): 0.1 to 50.0 (2.0) T_n (reset time): 1 to 999 s (120 s) T_V (derivative-action time): 0 to 999 s (0 s) T_Y (valve transit time): 15, 20, 25, ..., 240 s (35 s) CO1 → F12 - 0: On/off control **Function block parameters** Hysteresis: 1.0 to 30.0 °C (5.0 °C) Min. ON time: 0 to 10 min (2 min) Min. OFF time: 0 to 10 min (2 min)

F	Function	Default	Systems	Comments Function block parameters: value range (default setting)
13	Damping	0	Not system 1.9	CO1 → F13 - 1: OPEN signal damping (only when CO1 → F12 - 1) **Function block parameters** Max. system deviation: 3.0 to 10.0 °C (3.0 °C)
14	Release	0	Not system 1.9	CO1 → F14 - 1: Release RK1 at BE1; FG1 has no function. **Function block parameters** Active when BI = ON, OFF (ON)
16	Demand processing, 0 to 10 V To terminals 11/12	0	Not system 1.9	CO1 → F16 - 1: Demand processing, 0 to 10 V (only when CO1 → F17 - 0)
17	Binary demand processing To terminals 03/12	0	Not system 1.9	CO1 → F17 - 1: Binary demand processing (only when CO1 → F16 - 0 and CO2 → F01 - 0 and CO4 → F02 - 0) **Function block parameters** Active when OFF, ON (ON)
18	External demand using a 0 to 10 V signal	0	Not system 1.9	CO1 → F18 - 1: The standardized signal output (terminals 11/12) is not available anymore as a control output. The maximum flow set point (with boost, if applicable) is demanded as a 0 to 10 V signal at the standardized signal output. **Function block parameters** Lower transmission range: 0.0 to 150.0 °C (0.0 °C) Upper transmission range: 0.0 to 150.0 °C (120.0 °C) Boost flow temperature demand: 0.0 to 30.0 °C (0.0 °C)
20	Demand for external heat	0	All	CO1 → F20 - 1: External demand for heat due to insufficient heat supply
21	Speed control of the charging pump	0	16.x	CO1 → F21 - 1: Temperature-based adaptation of the delivery rate of the charging pump **Function block parameters** Start speed reduction, limit: 5.0 to 90.0 °C (40.0 °C) Stop speed reduction, limit: 5.0 to 90.0 °C (50.0 °C) Minimum speed: 0 to 50 % (20 %) Maximum speed: 0 to 100 % (100 %)
22	SLP depending on return temperature	0	16.x	CO1 → F22 - 1: Storage tank charging pump not ON unless return hot
23	Differential temperature control	0	1.0, 16.0	CO1 → F23 - 1: Activation of differential temperature control **Function block parameters** Set point of differential temperature control: 0.0 to 50.0 °C (20.0 °C) Influence factor K_P: 0.1 to 10.0 (1.0) Minimum speed: 0 to 100 % (20 %)
24	Demand only	0	Not system 1.9	CO1 → F24 - 1: RK1 works as a feeder circuit. RK1 only processes external demand for heating; UP1 runs depending on demand
27	Discharging protection	0	16.x	CO1 → F27 - 1: Discharging protection active

F	Function	De-fault	Systems	Comments Function block parameters: value range (default setting)
28	Variable night set-back	0	Not systems 1.5x, 1.6, 3.x, 16.x	CO1 → F28 - 1: Variable night set-back (only when CO1 → F11 - 0) **Function block parameters** OTL night 100 %: -50.0 to +20.0 °C (+5.0 °C) OTL day 0 %: -50.0 to +5.0 °C (-15.0 °C)
29	Rapid heat-up	0	All	CO1 → F29 - 1 (only when CO1 → F07 - 0 and CO5 → F41 - 0) **Function block parameters** Duration: 10 to 120 min (45 min) Raise: 1 to 100 % (30 %)

F: Function block number, WE: Default setting, Anl: System code number

CO2: RK2 - Heating circuit 2

F	Function	De-fault	Systems	Comments Function block parameters: value range (default setting)
01	Room sensor	0	3.x, 4.x, 10.0, 16.x	CO2 → F01 - 1: Room sensor RF2, temperature reading and FG2 input for Types 5244, 5257-5 and 5257-51 Room Panels active
02	Outdoor sensor	1		CO2 → F02 - 1: With outdoor sensor AF1; Outdoor-temperature-compensated control active
03	Return sensor	0	3.0, 4.x, 16.x	CO2 → F03 - 1: Return sensor RüF2; limitation function active
		1	10.x	
04	Cooling control	0	3.x, 4.x, 10.0, 16.x	CO2 → F04 - 1: Cooling control The cooling control function causes a reversal of the operating direction and a minimum limitation of the return temperature in RK2.
05	Underfloor heat-ing/drying of jointless floors	0	3.x, 4.x, 10.0, 16.x	CO2 → F05 - 1: Underfloor heating/drying of jointless floors **Function block parameters** Boost: 0.0 to 50.0 °C (0.0 °C) Start temperature: 20 to 60 °C (25 °C) Hold (days): 0 to 10 days (0 days) Temp. rise/day: 0.0 to 20.0 °C (5.0 °C) Maximum temperature: 25.0 to 60.0 °C (45.0 °C) Hold (days): 0 to 30 days (4 days) Temp. reduction/day: 0.0 to 20.0 °C (0.0 °C) Start condition: Stop, Start, Hold, Reduction
07	Optimization	0	3.x, 4.x, 10.0, 16.x	CO2 → F07 - 1: Optimization of heating times (only when CO2 → F01 - 1, CO2 → F02 - 1 and CO2→ 29 - 0)
08	Adaptation	0		CO2 → F08 - 1: Heating characteristic adaptation (only when CO2 → F01 - 1, CO2 → F02 - 1 and CO2 → F11 - 0)
09	Flash adaptation	0		CO2 → F09 - 1: Flash adaptation of flow temperature (only when CO2 → F01 - 1) **Function block parameters** Cycle time: 0 or 1 to 100 min (20 min) K_P (gain): 0.0 to 25.0 (0.0)
11	Four-point character-istic	0	Not system 3.5, 10.5, 25.5	CO2 → F11 - 1: Four-point characteristic (only when CO2 → F08 - 0) CO2 → F11 - 0: Gradient characteristic

F	Function	De-fault	Systems	Comments Function block parameters: value range (default setting)
12	Control mode	1	3.x, 4.x, 10.0, 16.x	CO2 → F12 - 1: Three-step control **Function block parameters** K_P (gain): 0.1 to 50.0 (2.0) T_n (reset time): 1 to 999 s (120 s) T_V (derivative-action time): 0 to 999 s (0 s) T_Y (valve transit time): 15, 20, 25, ..., 240 s (35 s) CO2 → F12 - 0: On/off control **Function block parameters** Hysteresis: 1.0 to 30.0 °C (5.0 °C) Min. ON time: 0 to 10 min (2 min) Min. OFF time: 0 to 10 min (2 min)
13	Damping	0		CO2 → F13 - 1: OPEN signal damping (only when CO2 → F12 - 1) **Function block parameters** Max. system deviation: 3.0 to 10.0 °C (3.0 °C)
14	Release	0		CO2 → F14 - 1: Release RK2 at BE2; FG2 has no function. **Function block parameters** Active when BI = ON, OFF (ON)
16	Demand processing 0 to 10 V	0	3.x, 4.x, 10.0, 16.x	CO2 → F16 - 1: Demand processing in RK2 at terminals 11/12
24	Demand only	0	3.x, 4.x, 10.0, 16.x)	CO2 → F24 - 1: RK2 works as a feeder circuit. RK2 only processes external demand for heating; UP2 runs depending on demand
28	Variable night set-back	0	Not system 3.5	CO2 → F28 - 1: Variable night set-back (only when CO2 → F11 - 0) **Function block parameters** OTL night 100 %: –50.0 to +20.0 °C (5.0 °C) OTL day 0 %: –50.0 to +5.0 °C (–15.0 °C)
29	Rapid heat-up	0	All	CO2 → F29 - 1 (only when CO2 → F07 - 0 and CO5 → F41 - 0) **Function block parameters** Duration: 10 to 120 min (45 min) Raise: 1 to 100 % (30 %)

F: Function block number, WE: Default setting, Anl: System code number

CO4: DHW circuit

F	Function	De-fault	Systems	Comments Function block parameters: value range (default setting)
01	Storage tank sensor SF1	0	1.9, 11.9	CO4 → F01 - 1: Storage tank sensor SF1 CO4 → F01 - 0: Storage tank thermostat (only when CO4 → F02 - 0; not system 11.0)
		1	1.1–1.3, 1.5, 1.6, 2.x, 4.1, 4.5, 11.0, 11.2	
02	Storage tank sensor SF2	0	1.1, 1.3, 1.5, 2.0, 2.1, 2.3, 4.1, 4.5, 11.0, 11.1, 11.5	CO4 → F02 - 1: Storage tank sensor SF2 (not systems 1.3, 1.9, 2.3, 11.0 and 11.9) (only when CO4 → F01 - 1)
		1	1.2, 1.6, 2.2, 11.2	

F	Function	De-fault	Systems	Comments Function block parameters: value range (default setting)
03	Return sensor RüF2	0	1.9, 11.x	CO4 → F03 - 1: Return sensor RüF2; Limitation function active **Function block parameters** K_P (limiting factor): 0.1 to 10.0 (1.0)
04	Water flow sensor	0	1.9, 11.9	CO4 → F04 - 1: Water flow sensor active **Function block parameters** Sensor: (default = binary) Binary = Flow switch at binary input BE2 Analog (= water flow sensor 1400-9246) Sync. valve: 0 to 60 min (default = 0 min) 0 to 10 V (= vortex flow sensor) 2 to 10 V (= vortex flow sensor) 0 to 20 mA (= vortex flow sensor; 50 Ω parallel to the analog input) 4 to 20 mA (= vortex flow sensor; 50 Ω parallel to the analog input) When a vortex flow sensor is used: Analog input 1, 2, 3 (3) Lower range value: 0 to 10 V or 0 to 20 mA (adjustable in steps of 0.1) Lower range value: 0 to 250 l/min (adjustable in steps of 1 l/min) Upper range value: 0.1 to 10 V or 0.1 to 20 mA (adjustable in steps of 0.1) Upper range value: 0 to 250 l/min (adjustable in steps of 1 l/min) Processing start: 0 to 25 l/min (adjustable in steps of 0.1 l/min) Processing end: 0 to 250 l/min (adjustable in steps of 1 l/min)
05	Flow sensor	0	1.9, 11.9	CO4 → F05 - 1: Flow sensor VF4 (to measure storage tank charging temperature) active
06	Parallel pump operation	0	2.1–2.3, 4.1, 4.5	CO4 → F06 - 1: Parallel pump operation **Function block parameters** Stop: 0 to 10 min (10 min) Temperature limit: 20.0 to 90.0 °C (40.0 °C) CO4 → F06 - 0: UP1 switched off during DHW heating
07	Intermediate heating	1	2.x, 4.1-4.5	CO4 → F07 - 1: After 20 minutes of DHW heating, heating operation in UP1 circuit reactivated for 10 minutes CO4 → F07 - 0: Unlimited priority of storage tank charging in UP1 circuit
08	Priority (reverse)	0	1.1–1.3, 4.1, 4.5, 11.x	CO4 → F08 - 1: Priority through reverse control (only when CO4 → F09 - 0 and CO4 → F31 - 0) **Function block parameters** Start: 0 to 10 min (2 min) K_P (influence factor): 0.1 to 10.0 (1.0) System 4.5 only: control circuit HC1, HC2, HC1+HC2 (HC2)
09	Priority (set-back)	0	1.1-1.3, 4.1, 4.5, 11.1-11.6	CO4 → F09 - 1: Priority through set-back operation (only when CO4 → F08 - 0 and CO4 → F31 - 0) **Function block parameters** Start: 0 to 10 min (2 min) System 4.5 only: HC1, HC2, HC1+HC2 (HC2)
10	Circulation pump (DHW) integrated into heat exchanger	0	1.6, 11.2	CO4 → F10 - 1: Control of DHW circuit active while circulation pump (ZP) is running
		1	11.6	CO4 → F10 - 1: Control of DHW circuit active while circulation pump (ZP) is running

F	Function	Default	Systems	Comments Function block parameters: value range (default setting)
11	Operation of circulation pump (DHW) during storage tank charging	0	1.1–1.3, 1.5, 1.6, 2.x, 4.1, 4.5, 11.1, 11.2	CO4 → F11 - 1: Circulation pump ZP runs according to time schedule during storage tank charging CO4 → F11 - 0: Circulation pump (ZP) switched off during storage tank charging
12	Control mode	1	1.9, 11.x	CO4 → F12 - 1: Three-step control **Function block parameters** K_P (gain): 0.1 to 50.0 (2.0; systems 1.9, 11.9, 12.9, 13.9, 21.9: 0.6) T_n (reset time): 1 to 999 s (120 s, systems 3.9, 5.9, 17.x 18.x: 30 s; systems 1.9, 11.9, 12.9, 13.9, 21.9: 12 s) T_V (derivative-action time): 0 to 999 s (0 s) T_Y (valve transit time): 15 to 240 s (35 s) CO4 → F12 - 0: On/off control (not systems 3.8, 3.9, 5.9, 17.x, 18.x, 20.0); in this case: F12 - 0 = F12 - 1 **Function block parameters** Hysteresis: 1.0 to 30.0 °C (5.0 °C) Min. ON time: 0 to 10 min (2 min) Min. OFF time: 0 to 10 min (2 min)
13	Damping	0	1.9, 11.x	CO4 → F13 - 1: OPEN signal damping (only when CO4 → F12 - 1) **Function block parameters** Max. system deviation: 3.0 to 10.0 °C (8.0 °C)
14	Thermal disinfection	0	1.1–1.3, 1.5, 1.6, 1.9, 2.x, 4.1, 4.5, 11.x	CO4 → F14 - 1: Thermal disinfection (only when CO4 → F01 - 1) **Function block parameters** Day of week: Monday, Tuesday, ..., daily (Wednesday) Time: Adjustable as required (00:00 – 04:00) Disinfection temperature: 60.0 to 90.0 °C (70.0 °C) Duration: 0 to 255 min (0 min) Active when binary input (BE) = OFF, ON (ON) only possible when Start time = Stop time and without SF2/RF2. Input: Terminals 03/12
15	SLP depending on return temperature	0	1.5, 2.0, 2.1, 2.3, 4.1, 11.1	CO4 → F15 - 1: Storage tank charging pump not ON unless return hot
16	Priority for external demand	0	1.5, 1.6, 2.x, 4.1	CO4 → F16 - 1: Priority for external demand **Note:** a high external demand causes excessive charging temperatures in DHW circuits without control valve.
19	Switchover	0	1.1–1.3, 1.5, 1.6, 2.x, 4.1, 4.5, 11.1, 11.2	CO4 → F19 - 1: Switchover SF1, SF2 according to a time schedule. SF1 applies for day mode. SF1 applies for day mode and SF2 for night mode. (only when CO4 → F02 - 1)
20	Return control	0	11.1	CO4 → F20 - 1: DHW circuit additionally controlled by a globe valve
21	Speed control of the charging pump	0	1.1–1.3, 1.5, 1.6, 2.x, 4.1, 11.1, 11.2	CO4 → F21 - 1: Temperature-based adaptation of the delivery rate of the charging pump **Function block parameters** Start speed reduction, limit: 5.0 to 90.0 °C (40.0 °C) Stop speed reduction, limit: 5.0 to 90.0 °C (50.0 °C) Minimum speed: 0 to 50 % (20 %) Maximum speed: 0 to 100 % (100 %)

F	Function	Default	Systems	Comments Function block parameters: value range (default setting)
22	Cold charging protection	0	1.1	CO4 → F22 - 1: Storage tank charging started when the primary flow temperature is high enough **Function block parameters** Valve position: 1 to 100 %
24	Bottom sensor for thermal disinfection	0	1.2, 1.6, 11.2, 11.6	CO4 → F24 - 1: only when CO4 → F14 - 1 Sensor RüF2 as switch-off sensor active
27	Discharging protection		Not systems 1.1-1.3, 1.9, 11.0, 11.9	CO4 → F27 - 1: Discharging protection active
31	Priority (stand-by)	0	1.1-1.3, 4.1, 4.5, 11.1-11.6	CO4 → F31 - 1: Priority through stand-by mode (only when CO4 → F08 - 0 and F09 - 0) **Function block parameters** Start: 0 to 10 min (2 min) HC1, HC2, HC1+HC2 (system 4.5 only)
35	Release DHW	0	All	CO4 → F35 - 1: Release DHW at BE2 FG2 has no function. **Function block parameters** Active when BI = ON, OFF (ON)

F: Function block number, WE: Default setting, Anl: System code number

CO5: System-wide functions

If the reading CO5 → F00 - 1 appears on the display, any access to the return, flow rate and power settings is locked.

F	Function	Default	Systems	Comments Function block parameters: value range (default setting)
01	Sensor type	1	All	CO5 → F01 - 1, F02 → 0: Pt 1000 CO5 → F01 - 0, F02 → 0: PTC CO5 → F01 - 1, F02 → 1: Ni 1000
02				
03				
04	Summer mode	0	Not systems 1.5, 1.6, 1.9, 3.5	CO5 → F04 - 1: Summer mode **Function block parameters** Date: Adjustable as required (01.06. - 30.09.) No. days until activation: 1 to 3 (2) No. days until deactivation: 1 to 3 (1) Limit: 0.0 to 30.0 °C (18.0 °C)
05	Delayed outdoor temperature adaptation (decreasing)	0	Not system 1.9	CO5 → F05 - 1: Delayed outdoor temperature adaptation as the temperature falls **Function block parameters** Delay/h: 0.2 to 6.0 °C (3.0 °C)
06	Delayed outdoor temperature adaptation (increasing)	0	Not system 1.9	CO5 → F06 - 1: Delayed outdoor temperature adaptation as the temperature rises **Function block parameters** Delay/h: 0.2 to 6.0 °C (3.0 °C)
07	Error message	0	Not systems 4.1, 4.5, 11.1, 11.2, 11.3, 11.6, 16.1, 16.6	CO5 → F07 - 1: Terminal for error message: see table in system scheme in Chapter 16.1. **Function block parameters** Relay contact = NO contact, NC contact (NO contact)
08	Summer time	0	All	CO5 → F08 - 1: Summer/standard time switchover

F	Function	Default	Systems	Comments Function block parameters: value range (default setting)
09	Frost protection	0	1.5, 1.6, 1.9, 3.5	CO5 → F09 - 0: Restricted frost protection **Function block parameters** Frost protection limit: –15.0 to +3.0 °C (+3.0 °C)
		1	Not systems 1.5, 1.6, 1.9, 3.5	CO5 → F09 - 1: Highest priority for frost protection **Function block parameters** Frost protection limit: –15.0 to +3.0 °C (+3.0 °C)
10	Power limitation at binary input BE2	0	Not system 1.9	CO5 → F10 - 1: Power limitation in RK1 with pulses (only when CO6 → F12 - 0) **Function block parameters** Max. limit: OT to 800 pulses/h (15 pulses/h) Max. limit (heating): OT to 800 pulse/h (15 pulse/h) Max. limit (DHW): 1 to 800 pulses/h (15 pulses/h) Limiting factor: 0.1 to 10.0 (1.0) **Note:** 'Max. limit (heating)' and 'Max. limit (DHW)' not with systems 1.0, 1.5-1.9, 3.0, 3.5, 10.x, 11.x, 16.x
12	Creep feed rate limitation	0	Not system 1.9	CO5 → F12 - 1: Creep feed rate limitation **Function block parameters** Switching mode: Analog, Binary (Binary) Active when BI = ON, OFF (ON)
14	Operation UP1	0	3.0, 16.x	CO5 → F14 - 1: Feeder pump UP1 operation to cover own demand **Note:** The feeder pump UP1 also starts to run to cover the demand of RK2.
15	Release	0	All	CO5 → F15 - 1: Release controller at BE1 **Function block parameters** Active when BI = ON, OFF (ON)
16	Return temperature limitation	0	All	CO5 → F16 - 1: Return temperature limitation with P algorithm
19	Monitoring	0	All	CO5 → F19 - 1: Temperature monitoring active
20	Sensor calibration	1	All	CO5 → F20 - 1: Set all sensor calibration values CO5 → F20 - 0: Delete all sensor calibration values
21	Lock manual level	0	All	CO5 → F21 - 1: Lock manual level Controller runs in automatic mode in ☜ switch position.
22	Lock rotary switch	0	All	CO5 → F22 - 1: Lock the rotary switch It is still possible to enter the key number.
23	OT with 0-10 V	0	All	CO5 → F23 - 1: Send or receive outdoor temperature as 0 to 10 V signal (terminals 11/12) **Function block parameters** Direction: Input, Output (Input) Lower range value: -50.0 to +100.0 °C (-20.0 °C) Upper range value: -50.0 to +100.0 °C (+50.0 °C)
24	0-10 V Input	0	All	CO5 → F24 - 1: The measured value at the selected analog inputs is displayed as a special value.

F	Function	Default	Systems	Comments Function block parameters: value range (default setting)
25	AA1 reverse 0 to 10 V Output	0	All	CO5 → F25 - 0: 0 V/0 % = Valve CLOSED/pump OFF CO5 → F25 - 1: 0 V/0 % = Valve OPEN/pump with max. delivery rate **Function block parameters** Zero: 0 to 50 % (0 %)
31	AE1 zero 0 to 10 V Input	0	All	CO5 → F31 - 1 **Function block parameters** Zero: 5 to 20 % (5 %) Lower transmission range: 0 to 150 °C (0 °C) Upper transmission range: 0 to 150 °C (120 °C)
34	AA1 PWM 0 to 10 V Output	0	All	CO5 → F34 - 0/1 TROVIS 5573-1 cannot process a PWM signal at the 0 to 10 V output. **Function block parameters** Function: 0 to 10 input, Y1, Y2, 10 V supply, 3 V supply, differential temperature control, SLP speed, external demand, outdoor temperature (Y1)
41	Smooth transition	0	All	CO5 → F41 - 1 (only when CO1, 2 → F29 - 0) **Function block parameters** Day-night: 0 to 240 min (30 min) Night-day: 0 to 240 min (30 min)

F: Function block number, WE: Default setting, Anl: System code number

CO6: Modbus

F	Function	Default	Systems	Comments Function block parameters: value range (default setting)
01	Modbus	1	All	CO6 → F01 - 1: Modbus active
02	16-bit address	0	All	CO6 → F02 - 1: Modbus 16-bit addressing (only when CO6 → F01 - 1) CO6 → F02 - 0: Modbus 8-bit addressing
03	Modem function	0	All	CO6 → F03 to F06 settings are required to configure the error message transfer to a connected Modbus/GPRS gateway.
04	Automatic configuration	0	All	
05	Lock dial-up to building automation system	0	All	
06	Dial-up to building automation system also when error corrected	0	All	
07	Monitoring	0	All	CO6 → F07 - 1: Control system monitoring Resets all level bits to 'Autonomous' when there is no communication. (only when CO6 → F01 - 1)
08	Text message	0	All	CO6 → F08 is required to configure the error message transfer to a connected Modbus/GPRS gateway.

F	Function	Default	Systems	Comments Function block parameters: value range (default setting)
10	Meter bus	0	All	CO6 → F10 - 1: Meter bus active **Function block parameters** HM 1...3 address: 0 to 255 (255) HM1...3 model: EN1434, Multical3, Apator, SLS/WSF (EN1434) HM1...3 mode: 24h, Cont., CoiL (24h) For HM1 with 'EN1434' and 'Cont.' settings, additionally: Additionally: **Select:** Tariff: Tar-A, Tar-E (Tar-A, tariff schedule OFF)
11	Flow rate limitation in RK1	0	Not system 1.9	CO6 → F11 - 1: Flow rate limitation (only when CO6 → F10 - 1 and when HM1 is activated) **Function block parameters** Max. limit: AT, 0.01 to 650 m^3/h (1.5 m^3/h) Max. limit (heating)[1]: AT, 0.01 to 650 m^3/h (1.5 m^3/h) Max. limit (DHW)[1]: 0.01 to 650 m^3/h (1.5 m^3/h) Limiting factor: 0.1 to 10 (1) 1) Not systems 1.0, 1.5–1.9, 3.0, 3.5, 4.0, 10.0, 11.x
12	Power limitation in RK1	0	Not system 1.9	CO6 → F12 - 1: Power limitation (only when CO6 → F10 - 1 and when HM1 is activated) **Function block parameters** Max. limit: AT, 0.1 to 6500 kW (1.5 kW) Max. limit (heating) [1]: AT, 0.1 to 6500 kW (1.5 kW) Max. limit (DHW) [1]: 0.1 to 6500 kW (1.5 kW) Limiting factor: 0.1 to 10 (1) 1) Not systems 1.0, 1.5–1.9, 3.0, 3.5, 4.0, 10.0, 11.x
13	Flow rate limitation in RK2	0	Systems 3.0, 4.x, 10.0, 11.x	CO6 → F13 - 1: Flow rate limitation (only when CO6 → F10 - 1 and when HM2 is activated) **Function block parameters** Max. limit: 0.01 to 650 m^3/h (1.5 m^3/h) Limiting factor: 0.1 to 10 (1)
14	Power limitation in RK2	0		CO6 → F14 - 1: Power limitation (only when CO6 → F10 - 1 and when HM2 is activated) **Function block parameters** Max. limit: 0.1 to 6500 kW (1.5 kW) Limiting factor: 0.1 to 10 (1)
17	Rtn limit dep. power	0	All	CO6 → F17 - 1: New maximum return limit at a power higher than the max. limit (only when CO6 → F10 - 1 and when HM1 is activated) **Function block parameters** Max. limit: 0.1 to 6500 kW (1.5 kW) Max. return temperature: 5.0 to 90 °C (55 °C)
20	Modbus without building automation system	0	All	CO6 → F20 - 1: Various Modbus specifications do not have any effect on the collective level/building automation system reading

F: Function block number, WE: Default setting, Anl: System code number

CO8: Initialization of binary inputs BE1 and BE2 (all systems)

F	Function	De-fault	Systems	Comments Function block parameters: value range (default setting)
01	Processing of binary input BE1	0	All	CO8 -> F01 - 1: Processing active **Function block parameters** Error message when binary input BE = 0, BE = 1, none (1)
02	Processing of binary input BE2	0	All	CO8 -> F02 - 1: Processing active **Function block parameters** Error message when binary input BE = 0, BE = 1, none (1)

F: Function block number, WE: Default setting, Anl: System code number

16.7 Parameter lists

PA1: Heating circuit HC1

P	Reading	Parameter: Value range (default setting)
01	P01 1.2	Flow gradient 0.2 to 3.2 (1.2) 0.2 to 1.0 (0.5) when CO1 → F05 - 1
02	P02 0.0°C	Level (parallel shift) –30.0 to +30.0 °C (0.0 °C)
03	P03 50.0°C	Flow set point (day) –5.0 to +150.0 °C (+50.0 °C) (only when CO1 → F02 - 0 and CO1 → F09 - 1)
04	P04 30.0°C	Flow set point (night) –5.0 to +150.0 °C (+30.0 °C) (only when CO1 → F02 - 0 and CO1 → F09 - 1)
05	P05 -15° -5° 5° 15° 70° 55° 40° 25° 60° 40° 20° 20° 65° 65° 65° 65°	Four-point characteristic Outdoor temperature: –50.0 to +50.0 °C (–15.0 °C, –5.0 °C, +5.0 °C, +15.0 °C) When CO1 → F04 - 1: (5 °C, 15 °C, 25 °C, 30 °C) Flow temperature: –5.0 to +150.0 °C (+70.0 °C, +55.0 °C, +40.0 °C, +25.0 °C) When CO1 → F04 - 1: (20 °C, 15 °C, 10 °C, 5 °C) Reduced flow temperature: –5.0 to +150.0 °C (+60.0 °C, +40.0 °C, +20.0 °C, +20.0 °C) When CO1 → F04 - 1: (30 °C, 25 °C, 20 °C, 15 °C) Return temperature: 5.0 to 90.0 °C (65.0 °C, 65.0 °C, 65.0 °C, 65.0 °C)
	-15° -5° 5° 15° 0.00 0.00 m³/h	Flow rate 0.01 to 650 m³/h (0.00 m³/h, 0.00 m³/h, 0.00 m³/h, 0.00 m³/h)
	-15° -5° 5° 15° 0.0 0.0 kW	Power 0.1 to 6500 kW (when CO6 → F12 - 1) (TROVIS 5573-11 only) or 1 to 800 pulse/h (when CO5 → F10 - 1) (0.0 kW, 0.0 kW, 0.0 kW, 0.0 kW) or (0.0 pulse/h, 0.0 pulse/h, 0.0 pulse/h, 0.0 pulse/h)
06	P06 20.0°C	Min. flow temperature –5.0 to +150.0 °C (+20.0 °C)
07	P07 70.0°C	Max. flow temperature 5.0 to 150.0 °C (70.0 °C) 5.0 to 50.0 °C (50.0 °C) when CO1 → F05 - 1
09	P09 -15.0°C	Outdoor temperature for continuous day mode –50.0 to +5.0 °C (–15 °C)
10	P10 40.0°C	Minimum flow temperature set point HC for binary demand processing 5.0 to 150.0 °C (40.0 °C)
11	P11 1.2	Return gradient 0.2 to 3.2 (1.2)

P	Reading	Parameter: Value range (default setting)
12	P12 0.0°C	Return level –30.0 to +30.0 °C (0.0 °C)
13	P13 65.0°C	Base point for return temperature 5.0 to 90.0 °C (65.0 °C)
14	P14 65.0°C	Max. return temperature 5.0 to 90.0 °C (65.0 °C)
15	P15 5.0°C	Set point boost (pre-control circuit): 0.0 to 50.0 °C (5.0 °C)
16	P16 AUTO	Minimum set point to charge buffer tank: AUTO to 90.0 °C (AUTO)
17	P17 AUTO	Stop charging of the buffer tank: AUTO to 90.0 °C (AUTO)
18	P18 6.0°C	Charging temperature boost: 0.0 to 50.0 °C (6.0 °C)
19	P19 1.0	Lag time of charging pump 0.0 to 10.0 (1.0)
21	P21 150.0°C	Demand processing limit: 5.0 to 150 °C (150 °C)

PA2: Heating circuit HC2

P	Reading	Parameter: Value range (default setting)
01	P01 1.2	Flow gradient 0.2 to 3.2 (1.2) 0.2 to 1.0 (0.5) when CO2 → F05 - 1
02	P02 0.0°C	Level (parallel shift) –30.0 to +30.0 °C (0.0 °C)
03	P03 50.0°C	Flow set point (day) –5.0 to +150.0 °C (+50.0 °C) (only when CO2 → F02 - 0 and CO2 → F09 - 1)
04	P04 30.0°C	Flow set point (night) –5.0 to +150.0 °C (+30.0 °C) (only when CO2 → F02 - 0 and CO2 → F09 - 1)
05	P05 -15° -5° 5° 15° 70° 55° 40° 25° 60° 40° 20° 20° 65° 65° 65° 65°	Four-point characteristic Outdoor temperature: –50.0 to +50.0 °C (–15.0 °C, –5.0 °C, +5.0 °C, +15.0 °C) When CO2 → F04 - 1: (5 °C, 15 °C, 25 °C, 30 °C) Flow temperature: –5.0 to +150.0 °C (+70.0 °C, +55.0 °C, +40.0 °C, +25.0 °C) When CO2 → F04 - 1: (20 °C, 15 °C, 10 °C, 5 °C) Reduced flow temperature: –5.0 to +150.0 °C (+60.0 °C, +40.0 °C, +20.0 °C, +20.0 °C) When CO2 → F04 - 1: (30 °C, 25 °C, 20 °C, 15 °C) Return temperature: 5.0 to 90.0 °C (65.0 °C, 65.0 °C, 65.0 °C, 65.0 °C)
06	P06 20.0°C	Min. flow temperature –5.0 to +150.0 °C (+20.0 °C)
07	P07 70.0°C	Max. flow temperature 5.0 to 150.0 °C (70.0 °C) 5.0 to 50.0 °C (50.0 °C) when CO2 → F05 - 1
09	P09 -15.0°C	Outdoor temperature for continuous day mode –50.0 to +5.0 °C (–15 °C)

P	Reading	Parameter: Value range (default setting)
11	P11 1.2	Return gradient 0.2 to 3.2 (1.2)
12	P12 0.0°C	Return level –30.0 to +30.0 °C (0.0 °C)
13	P13 65.0°C	Base point for return temperature 5.0 to 90.0 °C (65.0 °C)
14	P14 65.0°C	Max. return temperature 5.0 to 90.0 °C (65.0 °C)
15	P15 5.0°C	Set point boost (pre-control circuit) 0.0 to 50.0 °C (5.0 °C)
21	P21 150.0°C	Demand processing limit 5.0 to 150 °C (150 °C)

PA4: Domestic hot water (DHW)

P	Reading	Parameter: Value range (default setting)
01	P01 40.0°C	Min. adjustable DHW set point 5.0 to 90.0 °C (40.0 °C)
02	P02 60.0°C	Max. adjustable DHW set point 5.0 to 90.0 °C (90.0 °C)
03	P03 5.0°C	Hysteresis 1.0 to 30.0 °C (5.0 °C)
04	P04 10.0°C	Charging temperature boost 0.0 to 50.0 °C (10.0 °C)
05	P05 80.0°C	Max. charging temperature (only when CO4 → F05 - 1) 20.0 to 150.0 °C (80.0 °C)
07	P07 65.0°C	Max. return temperature 5.0 to 90.0 °C (65.0 °C)
10	P10 10.0°C	Solar circuit pump ON 1.0 to 30.0 °C (10.0 °C)
11	P11 3.0°C	Solar circuit pump OFF 0.0 to 30.0 °C (3.0 °C)
12	P12 80.0°C	Max. storage tank temperature 20.0 to 90.0 °C (80.0 °C)
13	P13 80.0°C	Maximum buffer tank temperature 20.0 to 90.0 °C (80.0 °C)
14	P14 100%	Control signal DHW for storage tank charging 5 to 100 % (100 %)
19	P19 1.0	Lag time for storage tank charging pump (= Valve transit time T_Y x P19) 0.0 to 10.0 (1.0)

PA5: System-wide parameters

P	Reading	Parameter: Value range (default setting)
01	P01 60.0°C	Start temperature for boiler pump 20.0 to 90.0 °C (60.0 °C) (system 16.x only)
02	P02 5.0°C	Boiler pump hysteresis 0.0 to 30.0 °C (5.0 °C) (system 16.x only)

PA6: Modbus

P	Reading	Parameter: Value range (default setting)
01	P01 ADR 1	Modbus station address (8 bit) 1 to 246 (255) 1 to 3200 (255) when CO6 → F02 - 1

16.8 Customer-specific data

⇨ See next page.

Customer-specific data

Station	
Operator	
Contact at SAMSON	
System code number	

Function block settings in configuration levels

	CO1	CO2	CO4	CO5	CO6	CO8
F01						
F02						
F03						
F04						
F05						
F06						
F07						
F08						
F09						
F10						
F11						
F12						
F13						
F14						
F15						
F16						
F17						
F18						
F19						
F20						
F21						
F22						
F23						
F24						
F25						
F27						
F28						
F29						
F31						
F34						
F35						
F41						

Settings at the rotary switch · Set points

Parameters	Switch position 🌡☼	Value range
HC1 room temperature		0.0 to 40.0 °C
HC2 room temperature		
DHW temperature		Min. to max. DHW temperature
HC1 OT deactivation value		0.0 to 50.0 °C
HC2 OT deactivation value		

Parameters	Switch position 🌡☾	Value range
HC1 room temperature		0.0 to 40.0 °C
HC2 room temperature		
DHW temperature		Min. to max. DHW temperature
HC1 OT deactivation value		-50.0 to +50.0 °C
HC2 OT deactivation value		

Settings at the rotary switch · Times-of-use · Switch position

Times-of-use HC1	Mon	Tue	Wed	Thu	Fri	Sat	Sun	Value range
Start first time-of-use								00:00 to 24:00 h
Stop first time-of-use								
Start second time-of-use								
Stop second time-of-use								
Start third time-of-use								
Stop third time-of-use								

Times-of-use HC2	Mon	Tue	Wed	Thu	Fri	Sat	Sun	Value range
Start first time-of-use								00:00 to 24:00 h
Stop first time-of-use								
Start second time-of-use								
Stop second time-of-use								
Start third time-of-use								
Stop third time-of-use								

Times-of-use DHW	Mon	Tue	Wed	Thu	Fri	Sat	Sun	Value range
Start first time-of-use								00:00 to 24:00 h
Stop first time-of-use								
Start second time-of-use								
Stop second time-of-use								
Start third time-of-use								
Stop third time-of-use								

Times-of-use ZP	Mon	Tue	Wed	Thu	Fri	Sat	Sun	Value range
Start first time-of-use								00:00 to 24:00 h
Stop first time-of-use								
Start second time-of-use								
Stop second time-of-use								
Start third time-of-use								
Stop third time-of-use								

PA1 parameters (heating circuit HC1) and PA2 parameters (heating circuit HC2)

P	Parameters	PA1 (HC1)	PA2 (HC2)	Value range
01	Flow gradient			0.2 to 3.2
02	Level (parallel shift)			-30.0 to +30.0 °C
03	Flow set point (day)			-5.0 to +150.0 °C
04	Flow set point (night)			-5.0 to +150.0 °C
05	Four-point characteristic			
	Outdoor temperature, point 1			-50.0 to +50.0 °C
	Outdoor temperature, point 2			-50.0 to +50.0 °C
	Outdoor temperature, point 3			-50.0 to +50.0 °C
	Outdoor temperature, point 4			-50.0 to +50.0 °C
	Flow temperature, point 1			-5.0 to +150.0 °C
	Flow temperature, point 2			-5.0 to +150.0 °C
	Flow temperature, point 3			-5.0 to +150.0 °C
	Flow temperature, point 4			-5.0 to +150.0 °C
	Reduced flow temperature, point 1			-5.0 to +150.0 °C
	Reduced flow temperature, point 2			-5.0 to +150.0 °C
	Reduced flow temperature, point 3			-5.0 to +150.0 °C
	Reduced flow temperature, point 4			-5.0 to +150.0 °C
	Return temperature, point 1			5.0 to 90.0 °C
	Return temperature, point 2			5.0 to 90.0 °C
	Return temperature, point 3			5.0 to 90.0 °C
	Return temperature, point 4			5.0 to 90.0 °C
	Flow rate, point 1		–	0.01 to 650 m³/h
	Flow rate, point 2		–	0.01 to 650 m³/h
	Flow rate, point 3		–	0.01 to 650 m³/h
	Flow rate, point 4		–	0.01 to 650 m³/h
	Power, point 1		–	0.1 to 6500 kW or 1 to 800 pulses/h
	Power, point 2		–	
	Power, point 3		–	
	Power, point 4		–	
06	Min. flow temperature			-5.0 to +150.0 °C
07	Max. flow temperature			-5.0 to +150.0 °C
09	Outdoor temperature for continuous day mode			-50.0 to +5.0 °C
10	Minimum flow temperature set point HC for binary demand processing			5.0 to 150.0 °C
11	Return gradient			0.2 to 3.2
12	Return level			-30.0 to +30.0 °C
13	Base point for return temperature			5.0 to 90.0 °C
14	Max. return temperature			5.0 to 90.0 °C
15	Set point boost (pre-control circuit)			0.0 to 50.0 °C
16	Min. set point to charge buffer tank		–	AUTO to 90.0 °C

P	Parameters	PA1 (HC1)	PA2 (HC2)	Value range
17	Stop charging of the buffer tank		–	AUTO to 90.0 °C
18	Charging temperature boost		–	0.0 to 50.0 °C
19	Lag time of charging pump		–	0.0 to 10.0
21	Demand processing limit			5.0 to 150.0 °C

CO1 function block parameters (heating circuit HC1) and CO2 function block parameters (heating circuit HC2)

F	Function block parameters	CO1 (HC1)	CO2 (HC2)	Value range
03	K_P (limiting factor)			0.1 to 10.0
05	Start temperature			20.0 to 60.0 °C
	Hold (days)			0 to 10 days
	Temp. rise/day			0.0 to 10.0 °C
	Maximum temperature			25.0 to 60.0 °C
	Hold (days)			0 to 30 days
	Temp. reduction/day			0.0 to 10.0 °C
	Start condition			Stop, Start, Hold, Reduction
09	Cycle time			0 to 100 min
	K_P (gain)			0.0 to 25.0
12	K_P (gain)			0.1 to 50.0
	T_n (reset time)			1 to 999 s
	T_V (derivative-action time)			0 to 999 s
	T_Y (valve transit time)			15 to 240 s
	Hysteresis			1.0 to 30.0 °C
	Min. ON time			0 to 10 min
	Min. OFF time			0 to 10 min
13	Max. system deviation			3.0 to 10.0 °C
14	Active when BI =			ON, OFF
17	Active when BI =		–	ON, OFF
18	Lower range value		–	0.0 to 150.0 °C
	Upper range value		–	0.0 to 150.0 °C
	Boost		–	0.0 to 30.0 °C
21	Start speed reduction		–	5.0 to 90.0 °C
	Stop speed reduction		–	5.0 to 90.0 °C
	Minimum speed		–	0 to 50 %
	Maximum speed		–	0 to 100 %
23	Set point of differential temperature control		–	0.0 to 50.0 °C
	Influence factor K_P		–	0.1 to 10.0
	Minimum speed		–	0 to 100 %
28	OTL night 100 %			-50.0 to +20.0 °C
	OTL day 0 %			-50.0 to +5.0 °C
29	Duration			10 to 120 min
	Raise			1 to 100 %

PA4 parameters (domestic hot water heating)

P	Parameters	PA4 (DHW)	Value range
01	Min. adjustable DHW set point		5.0 to 90.0 °C
02	Max. adjustable DHW set point		5.0 to 90.0 °C
03	Hysteresis		1.0 to 30.0 °C
04	Charging temperature boost		0.0 to 50.0 °C
05	Max. charging temperature		20.0 to 150.0 °C
07	Max. return temperature		5.0 to 90.0 °C
10	Solar circuit pump ON		0.0 to 30.0 °C
11	Solar circuit pump OFF		20.0 to 90.0 °C
12	Max. storage tank temperature		20.0 to 90.0 °C
13	Maximum buffer tank temperature		20.0 to 90.0 °C
14	Control signal DHW for storage tank charging		5 to 100 %
19	Lag time for storage tank charging pump		0.0 to 10.0 (1.0)

CO4 function block parameters (domestic hot water heating)

F	Function block parameters	CO4 (DHW)	Value range
03	K_P (limiting factor)		0.1 to 10.0
04	Sensor		Analog, binary
	Sync. valve		0 to 60 min
	Lower range value		0 to 10 V, 0 to 20 mA
			0 to 250 l/min
	Upper range value		0.1 to 10 V, 0.1 to 20 mA
			0 to 250 l/min
	Processing start		0 to 25 l/min
	Processing end		0 to 250 l/min
06	Stop		0 to 10 min
	Temperature limit		20.0 to 90.0 °C
08	Start		0 to 10 min
	K_P (influence factor)		0.1 to 10.0
	Control circuit (only system Anl 4.5)		HC1, HC2, HC1+HC2
09	Start		0 to 10 min
	Control circuit		HC1, HC2, HC1+HC2
12	K_P (gain)		0.1 to 50.0
	T_n (reset time)		1 to 999 s
	T_V (derivative-action time)		0 to 999 s
	T_Y (valve transit time)		15 to 240 s
	Hysteresis		1.0 to 30.0 °C
	Min. ON time		0 to 10 min
	Min. OFF time		0 to 10 min
13	Max. system deviation		3.0 to 10.0 °C

F	Function block parameters	CO4 (DHW)	Value range
14	Day of the week		Monday to Sunday, daily
	Time		Adjustable as required
	Disinfection temperature		60.0 to 90.0 °C
	Set point boost		0.0 to 50.0 °C
	Duration		0 to 255 min
	Active when BI =		ON, OFF
21	Start speed reduction		5.0 to 90.0 °C
	Stop speed reduction		5.0 to 90.0 °C
	Minimum speed		0 to 50 %
	Maximum speed		0 to 100 %
22	Valve position when cold charging protection is active		1 to 100 %
30	ON time		2 to 30 min
	OFF time		2 to 30 min
31	Start time		0 to 10 min
	Control circuit		HC1, HC2, HC1+HC2
35	Active when BI =		ON, OFF

PA5 parameters (system-wide parameters)

P	Parameters	PA5	Value range
01	Start temp. for boiler pump		20.0 to 90.0 °C
02	Boiler pump hysteresis		0.0 to 30.0 °C

CO5 function block parameters (system-wide functions)

F	Function block parameters	CO5	Value range
04	Date		Adjustable as required
	No. days until activation		1 to 3
	No. days until deactivation		1 to 3
	Limit		0.0 to 30.0 °C
05	Delay/h		0.2 to 6.0 °C
06	Delay/h		0.2 to 6.0 °C
07	Relay contact		NC contact, NO contact
09	Limit		-15.0 to +3.0 °C
10	Max. limit		OT to 800 pulses/h
	Max. limit (heating)		OT to 800 pulses/h
	Max. limit (DHW)		1 to 800 pulses/h
	Limiting factor		0.1 to 10.0
12	Switching mode		Binary, analog
	Active when BI =		ON, OFF
15	Active when BI =		ON, OFF

F	Function block parameters	CO5	Value range
23	Direction		Input, Output
	Lower range value		-50.0 to +100.0 °C
	Lower range value		-50.0 to +100.0 °C
25	Zero point		0 to 50 %
31	Zero point		5 to 20 %
	Lower transmission range		0 to 150 °C
	Upper transmission range		0 to 150 °C
34	Output AA1		Y1, Y2, Y3, Y4, 10 V supply, 3 V supply, Differential temperature control, SLP speed, ZP speed, External demand, Outdoor temperature
41	Day-night		0 to 240 min
	Night-day		0 to 240 min

PA6 parameters (Modbus)

P	Parameters	PA6	Value range
01	Modbus station address (8 bit)		1 to 246

CO6 function block parameters (Modbus)

F	Function block parameters	CO6	Value range
10	Heat meter 1 address		0 to 255
	HM 1 model		EN1434, Multical3, Apator, SLS/WSF
	Heat meter 1 mode		24 h, Cont., CoiL
	Heat meter 2 address		0 to 255
	HM 2 model		EN1434, Multical3, Apator, SLS/WSF
	Heat meter 3 mode		24 h, Cont., CoiL
	Heat meter 3 address		0 to 255
	HM 3 model		EN1434, Multical3, Apator, SLS/WSF
	Heat meter 3 mode		24 h, Cont., CoiL
11	Max. limit		OT 0.01 to 650 m³/h
	Max. limit (heating)		OT 0.00 to 650 m³/h
	Max. limit (DHW)		0.01 to 650 m³/h
	Limiting factor		0.1 to 10
12	Max. limit		OT 0.1 to 6500 kW
	Max. limit (heating)		OT 0.0 to 6500 kW
	Max. limit (DHW)		0.1 to 6500 kW
	Limiting factor		0.1 to 10
13	Max. limit		0.01 to 650 m³/h
	Limiting factor		0.1 to 10

F	Function block parameters	CO6	Value range
14	Max. limit		0.1 to 6500 kW
	Limiting factor		0.1 to 10
17	Max. limit		0.1 to 6500 kW
	Max. return temperature		5.0 to 90 °C

CO8 function block parameters (initialization of free inputs)

F	Function block parameters	CO8	Value range
1	Error message when		BI = 0, BI = 1, none (1)
2	Error message when		BI = 0, BI = 1, none (1)

17 Appendix B

17.1 Accessories

Table 6: *Accessories*

Surge arrester SA 5000	Order no. 1400-9868
Memory module	Order no. 1400-9379
Mini module	Order no. 1400-7436
Data logging module	Order no. 1400-9378
USB Converter 3	Order no. 1400-9377
4-port bus hub	Order no. 1400-7140
RS-485 communication module	Order no. 8812-2002
Modbus GPRS gateway	Order no. 1402-0701
▶ SAM HOME Gateway	Type 5660
▶ SAM MOBILE+ Gateway	Type 5656
TROVIS-VIEW software (free of charge)	▶ www.samsongroup.com > DOWNLOADS > Software & Drivers > TROVIS-VIEW
SAM DISTRICT ENERGY	▶ www.samsongroup.com > PRODUCTS > Digital solutions > SAM DISTRICT ENERGY ▶ EB 6901
Water flow sensor with extension cable	Order no. 1400-9246
Sensors and room panels	▶ www.samsongroup.com > PRODUCTS > Sensors and Thermostats ▶ T 5200 (Information Sheet: Temperature Sensors and Thermostats)

17.2 After-sales service

Product support

Service hotline for heating controllers belonging to TROVIS 5400 and TROVIS 5500 Automation Systems (fees apply):

Monday to Friday: 7:30 to 16:00 h (CET)

Phone: 09002 4009-24 (EUR 0.99/min. for landline calls within Germany, other rates apply to calls from outside Germany or from a mobile network)

After-sales service

Contact our after-sales service for support concerning service or repair work or when malfunctions or defects arise.

You can reach our after-sales service at the following e-mail address:

▶ aftersalesservice@samsongroup.com

Addresses of SAMSON AG and its subsidiaries

The addresses of SAMSON AG, its subsidiaries, representatives and service facilities worldwide can be found on our website (▶ www.samsongroup.com) or in all product catalogs.

Required specifications

Please submit the following details:

- Model number
- Serial number
- Firmware version

Key number	**1732**

SAMSON AKTIENGESELLSCHAFT
Weismüllerstraße 3 · 60314 Frankfurt am Main, Germany
Phone: +49 69 4009-0 · Fax: +49 69 4009-1507
samson@samsongroup.com · www.samsongroup.com

2026-10-02 | English | 4000545436 | 1.5