DATA SHEET

T 8387-3 EN

Type 3731-3 Electropneumatic Ex d Positioner

with HART® communication

CE Ex certified

Application

Single-acting or double-acting Ex d positioner for attachment to pneumatic control valves. Self-calibrating, automatic adaptation to valve and actuator.

Set point	**4 to 20 mA**
Valve travel	**3.6 to 200 mm**
Opening angle	**24 to 100°**

The positioner ensures a predetermined assignment of the valve position (controlled variable x) to the input signal (set point w). It compares the input signal received from a control system to the travel or rotational angle of the control valve and issues a corresponding output signal pressure (output variable y).

Special features

- Simple attachment to all common linear and rotary actuators with interface for SAMSON direct attachment, NAMUR rib or valves with rod-type yokes according to IEC 60534-6-1, or to rotary actuators according to VDI/VDE 3845
- Any desired mounting position of the positioner (but not suspended)
- Simple one-knob, menu-driven operation also in hazardous areas
- LCD easy to read in any mounted position due to selectable reading direction
- Configurable with a computer over the SSP interface using the TROVIS-VIEW software
- Variable, automatic start-up with four different initialization modes
- Preset parameters · Only values deviating from the standard need to be adjusted
- Calibrated travel sensor without gears susceptible to wear
- Sub initialization mode (substitution) allows the positioner to be started up in case of emergency whilst the plant is running without the valve moving through the whole travel range
- Permanent storage of all parameters in EEPROM (protected against power failure)
- Two-wire system with a small electrical load of 450 Ω at 20 mA
- Adjustable output pressure limitation
- Activatable tight-closing function

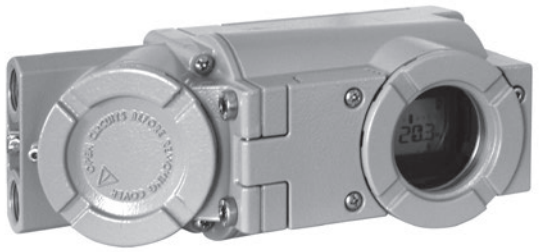

Fig. 1: *Type 3731-3 Electropneumatic Ex d Positioner with HART® communication*

- Continuous monitoring of zero point
- Integrated temperature sensor and operating hours counter
- Self-diagnostics; messages according to NAMUR Recommendation NE 107, optionally issued by an analog position transmitter
- Integrated EXPERTplus diagnostics for control valves (▶ T 8389)

Versions

Electropneumatic positioner with LCD, on-site operation, local communication with SSP interface, diagnostics

Additional options

- Binary contact, output according to NAMUR (EN 60947-5-6) or directly to PLC, configurable as a limit contact or fault alarm output
- Binary input
- Analog position transmitter with two-wire transmitter
- Forced venting (solenoid valve function)

Principle of operation

The positioner is mounted on pneumatic control valves and is used to assign the valve position (controlled variable x) to the control signal (reference variable w). The positioner compares the electric control signal of a control system to the travel or rotational angle of the control valve and issues a signal pressure (output variable y) for the pneumatic actuator.

The positioner mainly consists of an electric travel sensor system (2), an analog i/p module with a downstream air capacity booster and the electronics with the microcontroller (5).

When a set point deviation occurs, the actuator is either vented or filled with air. Using the software, the signal pressure to the actuator can be limited to 1.4, 2.4 or 3.7 bar.

A constant air stream with a fixed set point to the atmosphere is created by flow regulator (9) with a fixed set point. The i/p module (6) is supplied with a constant upstream pressure by the pressure reducer (8) to make it independent of the supply air pressure.

Operation also in hazardous areas

The rotary pushbutton and display are accessible without having to open the positioner housing. As result, the positioner is still fully operable under hazardous area conditions.

The positioner is operated with a user-friendly rotary pushbutton. The parameters are selected by turning the button, pushing it activates the required setting. In the menu, all parameters are listed in one level, eliminating the need to search in submenus. All parameters can be checked and changed on site.

All values are displayed on the LCD. The reading direction of the LCD can be rotated by 180°.

To configure the positioner with SAMSON's TROVIS-VIEW software, the positioner is equipped with an additional digital interface to be connected to the RS-232 or USB interface of a computer.

All parameters can be accessed using HART® communication.

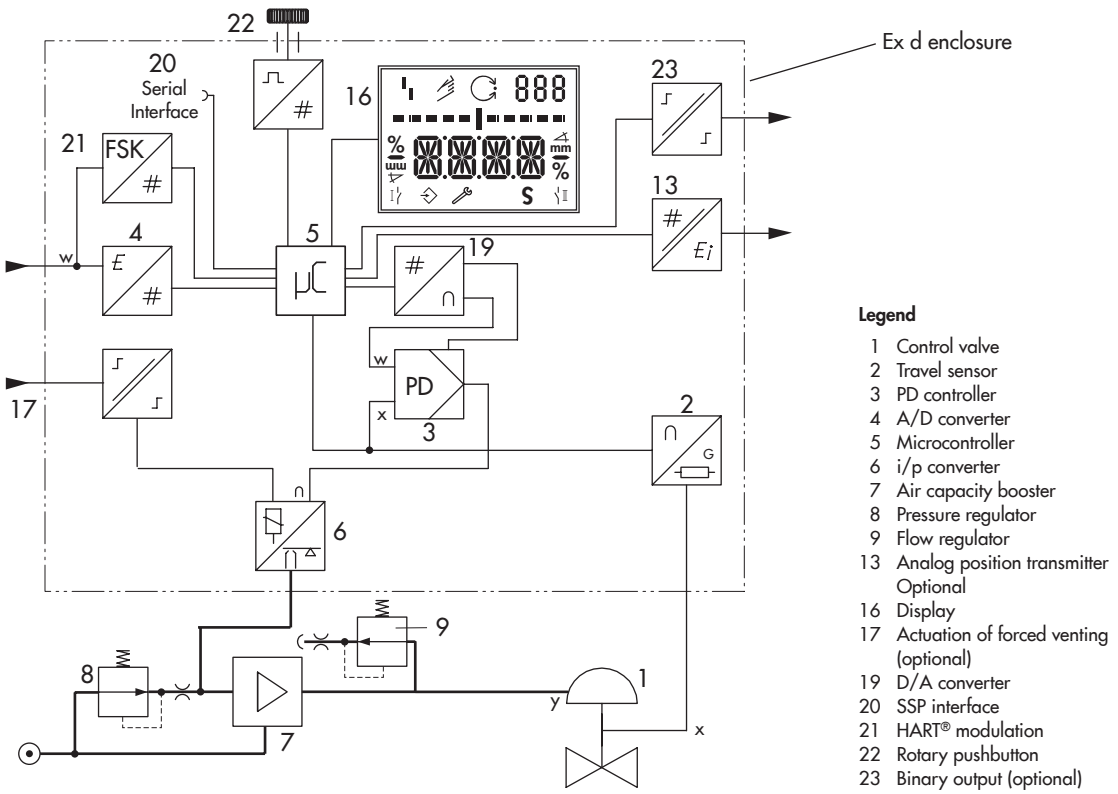

Fig. 2: *Circuit diagram of Type 3731-3 Ex d Positioner*

Table 1: *Technical data*

Type 3731-3 Positioner (technical data in test certificates additionally apply to explosion-protected devices)		
Rated travel	Adjustable	Direct attachment to Type 3277 Actuator: 3.6 to 30 mm Attachment according to IEC 60534-6-1: 3.6 to 300 mm Rotary actuators: 24 to 100° opening angle
Travel range	Adjustable	Within the initialized travel/angle of rotation; travel can be restricted to 1/5 at the maximum
Reference variable w	Signal range	4 to 20 mA · Two-wire device, reverse polarity protection · Minimum span 4 mA
	Static destruction limit	40 V · Internal current limit 60 mA
Use in safety-instrumented systems acc. to IEC 61508		Suitable for use in safety-instrumented systems up to SIL 2 (single device) and SIL 3 (with redundant configuration) Type 3731-3xxxxxx**1**..: Emergency shutdown at a reference variable ≤3.85 mA ± 0.05 mA
Minimum current		3.6 mA for display Load impedance ≤9 V corresponding to 450 Ω at 20 mA
Communication		
Local communication		SAMSON SSP interface and serial interface adapter
Software requirements (SSP)		TROVIS-VIEW with database module 3731-3
HART® communication		HART® field communication protocol Impedance in HART® frequency range: Receiving approx. 455 Ω · Sending approx. 185 Ω
Software requirements (HART®)	For handheld communicator	Device description for Type 3731-3
	For computer	DTM file certified according to specification 1.2, suitable for integrating the device into frame applications that support the use of FDT/DTM (e.g. PACTware); Integration into AMS™ Suite available
Supply air		Type 3731-321, Type 3731-327: 1.4 to 7 bar (20 to 105 psi) Type 3731-323: 1.4 to 6 bar (20 to 90 psi)
	Air quality acc. to ISO 8573-1 (2004 edition)	Maximum particle size and density: Class 4 · Oil content: Class 3 Pressure dew point: Class 3 or at least 10 K below the lowest ambient temperature to be expected
Signal pressure (output)		0 bar up to the capacity of the supply pressure · Can be limited to 1.4 bar/2.4 bar/3.7 bar ± 0.2 bar by software
Characteristic		Linear/Equal percentage/Reverse equal percentage Butterfly valve, rotary plug valve or segmented ball valve: Linear/equal percentage User-defined: adjustable over operating software
	Deviation	≤1 %
Hysteresis		≤0.3 %
Sensitivity		≤0.1 %
Transit time		Venting or filling with air adjustable separately up to 240 s by software
Direction of action		Reversible
Air consumption	Steady state	Independent of supply air approx. 110 l_n/h
Air output capacity	Actuator (supply)	At Δp = 6 bar: 8.5 m_n^3/h · At Δp = 1.4 bar: 3.0 m_n^3/h · $K_{Vmax(20\,°C)}$ = 0.09
	Actuator (exhaust)	At Δp = 6 bar: 14.0 m_n^3/h · At Δp = 1.4 bar: 4.5 m_n^3/h · $K_{Vmax(20\,°C)}$ = 0.15
Permissible ambient temperature		−40 to +80 °C · The limits in the test certificate additionally apply.
Permissible storage temperature		−60 to +80 °C
Influences	Temperature	≤0.2 %/10 K
	Supply air	None
	Effect of vibration	≤0.25 % up to 2000 Hz and 4 g according to IEC 770
Electromagnetic compatibility		Complying with EN 61000-6-2, EN 61000-6-3, EN 61326-1 and NAMUR Recommendation NE 21
Electrical connections		Two tapped holes ½ NPT or optionally M20 x 1.5 · Screw terminals for 2.5 mm² wire cross-section
Degree of protection		IP 66/NEMA 4X

Type 3731-3 Positioner (technical data in test certificates additionally apply to explosion-protected devices)			
Compliance		CE · EAC	
Explosion protection			
		See Table 2	
Materials			
Enclosure		Die-cast aluminum EN AC-AlSi10Mg (Fe) (EN AC-43400) acc. to DIN 1706 · Chromated and powder paint coated	
External parts		Stainless steel 1.4301/1.4305/1.4310	
Weight		Approx. 2.5 kg	
Optional binary output		Software limit contact or fault alarm output galvanically isolated, optionally NAMUR (EN 60947-5-6) or PLC	
Signal state		Terminals B-C Switching output AC/DC (PLC)	Terminals A-B
		Conducting/residual voltage < 1.7 V	Non-conducting/≥ 2.2 mA
		Non-conducting/high resistance, I < 100 µA	Conducting/≤ 1.0 mA
Operating voltage		Switching capacity: 40 V DC/28 V AC/0.3 A Static destruction limit: 45 V DC/32 V AC/0.4 A	Only for connection to NAMUR switching amplifier acc. to EN 60947-5-6
Optional binary input		Galvanically isolated · Configurable switching behavior	
Active switching behavior			
Connection		For external switch (floating contact)	
Electric data		Open-circuit voltage when contact is open: max. 10 V · Pulsed DC current reaching peak value of 100 mA	
Contact	Closed	ON switching state	
	Open	OFF switching state	
Passive switching behavior			
Connection		For externally applied DC voltage, reverse polarity protection	
Electric data		0 to 24 V, static destruction limit 40 V, input resistance 6.5 kΩ	
Voltage	> 6 V	ON switching state	
	< 4 V	OFF switching state	
Optional forced venting		Galvanic isolation	
Input		0 to 40 V DC/0 to 28 V AC, static destruction limit 45 V DC/32 V AC, input resistance ≥7 kΩ	
Signal		Fail-safe position at input voltage <3 V	Normal operation at input voltage >5.5 V
Optional analog position transmitter		Two-wire transmitter	
Power supply		11 to 35 V DC, reverse polarity protection, static destruction limit 45 V DC	
Output signal		4 to 20 mA	
Operating direction		Reversible	
Operating range		–1.25 to 103 % of the travel range, corresponding to 3.8 to 20.5 mA Optionally also for fault alarm indication over 2.4 or 21.6 mA according to NAMUR Recommendation NE 43	
Characteristic		Linear	
Hysteresis and high-frequency influence		Same as positioner	
Other influences		Same as positioner	

Table 2: *Explosion protection certificates*

Type		Certification			Type of protection/comments
3731	-321	EC type examination certificate	Number Date	PTB 11 ATEX 1014 X 2019-04-08	II 2G Ex db IIC T6 Gb, II 2G Ex db eb IIC T6 Gb II 2G Ex db [ia Ga] IIC T6 Gb II 2G Ex ia IIC T6 Ga II 2D Ex tb IIIC T80°C Db
		EAC Ex	On request		
		CCoE	Number Date Valid until	A P HQ MH 104 6238 2018-07-01 2023-12-31	Ex d IIC T6
		IECEx	Number Date	IECEx PTB 11.0084X 2011-09-14	Ex d IIC T6, T5, T4 Gb; Ex d e IIC T6, T5, T4 Gb; Ex tb IIIC T80°C Db IP66
		INMETRO	No. Date Valid until	IEx 13.0193X 2016-08-28 2022-08-27	Ex d IIC T* Gb; Ex de IIC T* Gb
		KCS	Number Date Valid until	13-KB4BO-0036 2013-01-31 2020-01-31	Ex d IIC T6/T5/T4
		NEPSI	Number Date Valid until	GYJ16.1083X 2016-01-24 2021-01-23	Ex d IIC T6~T4; Ex de IIC T6~T4
		STCC	Number Date Valid until	ZETC/21/2018 2018-04-27 2021-04-26	1Ex d IIC T4...T6; 1Ex de IIC T4...T6
	-323	**CSA**	Number Date	1709815 2005-10-04	Class I, Zone 1, Group IIB+H2 T4...T6; Class I, Div. 1+2, Groups B, C, D T4...T6; Class II, Div. 1, Groups E, F, G
		FM	Number Date	3024956 2006-01-30	Class I, Div. 1+2, Groups B, C, D; Class I, Zone 1, Groups IIB+H2; Class I, Div. 1+2 Groups E, F, G; Class III
	-324	EAC Ex	On request		
	-327	**JIS**	Number Date Valid until	TC17747 2018-09-12 2021-09-11	Ex d IIC T6

Mounting the positioner

The Type 3731-3 Positioner can be attached directly to the Type 3277 Actuator, to control valves with cast yokes or rod-type yokes according to IEC 60534-6 (NAMUR) or to rotary actuators according to VDI/VDE 3845.

Required mounting parts and accessories are listed in the Mounting and Operating Instructions ▶ EB 8387-3.

Direct attachment

The positioner can be attached directly to the Type 3277 Actuator over a connection block. In actuators with fail-safe action "Actuator stem extends" and Type 3277-5 Actuator (120 cm^2), the signal pressure is routed over an internal hole in the actuator yoke to the actuator. In actuators with fail-safe action "Actuator stem retracts" and in actuators with effective diaphragm areas of 240 cm^2 or larger, the signal pressure is routed to the actuator over ready-made external piping.

Attachment according to IEC 60534-6 (NAMUR)

The positioner is mounted according to IEC 60534-6-1 and NAMUR recommendation using a NAMUR bracket on the yoke of the control valve. The positioner can be mounted on either side of the control valve.

Attachment to rotary actuators

The positioner must be fitted with an adapter housing and spacers to attach it to rotary actuators according to VDI/VDE 3845.

Another common mounting kit suitable for SAMSON Type 3278 Rotary Actuator and VETEC Types S160 and R Actuators is available.

Ordering text

Type 3731-3... Positioner

- With pneumatic connecting rail ISO 228/1-G ¼
- Without/with pressure gauge for signal pressure indication
- Attachment to Type 3277 Actuator (120 to 700 cm^2)
- Attachment according to IEC 60534-6-1 (NAMUR)
- Travel: ... mm, if applicable, rod diameter: … mm
- Attachment to Type 3278 Rotary Actuator (160 cm^2)
- Attachment to rotary actuators according to VDI/VDE 3845
- Pneumatic reversing amplifier for double-acting actuators with connection acc. to ISO 228/1-G ¼ or ¼-18 NPT

Dimensions in mm

Direct attachment

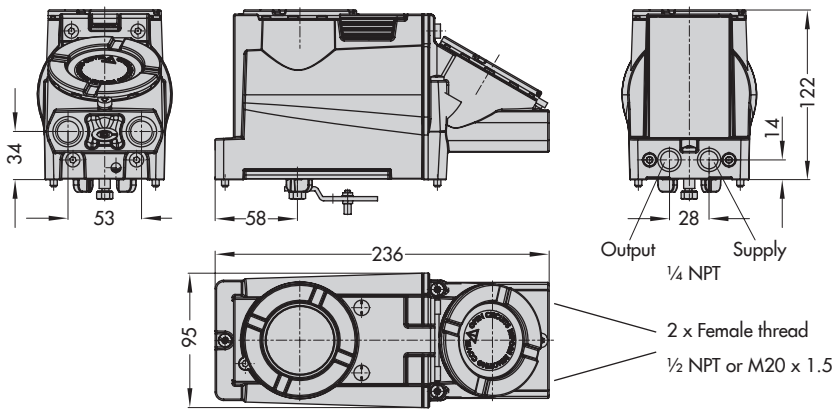

Attachment according to IEC 60534-6 and NAMUR

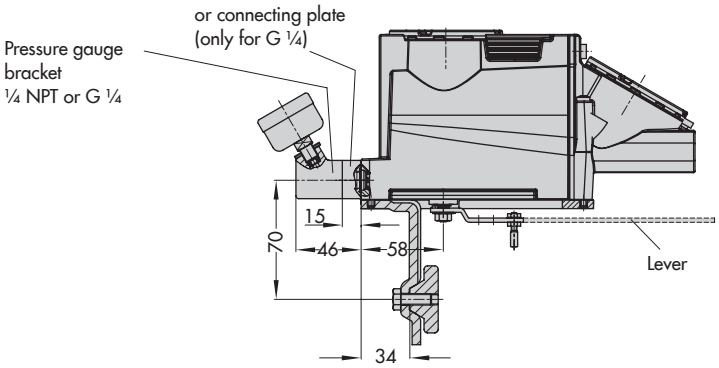

Attachment to rotary actuators

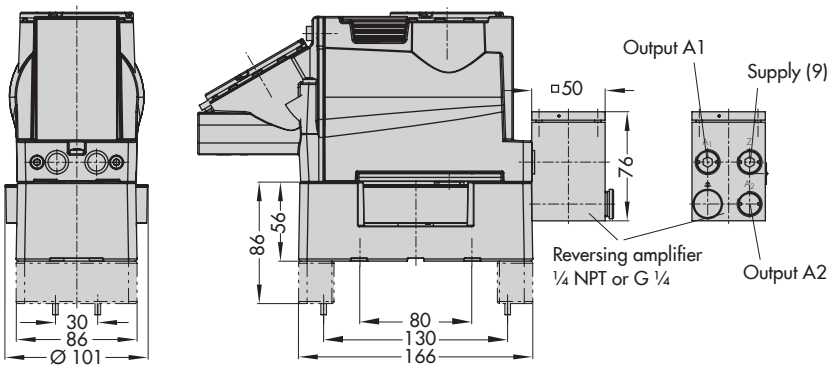

Lever

Lever	x	y	z
S	17 mm	25 mm	33 mm
M	25 mm	50 mm	66 mm
L	70 mm	100 mm	116 mm
XL	100 mm	200 mm	216 mm

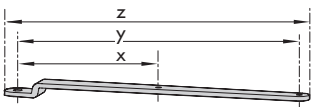

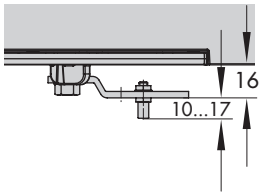

Table 3: *Article code*

Positioner	**Type 3731- 3**	**x**	**x**	**x**	**x**	**x**	**x**	**x**	**0**	**0**	**x**	**1**	**x**	**0**	**0**	**0**
With LCD, autotune, HART® communication																
Explosion protection																
ATEX	II 2G Ex db IIC T6 Gb, II 2G Ex db eb IIC T6 Gb II 2G Ex db [ia Ga] IIC T6 Gb II 2G Ex ia IIC T6 Ga II 2D Ex tb IIIC T80°C Db	2	1													
FM	Class I, Zone 1, Group IIB+H2 T4...T6; Class I, Div. 1+2, Groups B, C, D T4...T6; Class II, Div. 1, Groups E, F, G	2	3													
CSA	Class I, Zone 1, Group IIB+H2 T4...T6; Class I, Div. 1+2, Groups B, C, D T4...T6; Class II, Div. 1, Groups E, F, G															
EAC Ex	On request	2	4													
JIS	Ex d IIC T6	2	7													
Options																
Without				0	0											
Position transmitter				0	1											
Binary input				0	3											
Forced venting				0	5											
Binary output (NAMUR/PLC)				0	6											
Diagnostics																
EXPERTplus for control valves						4										
Electrical threaded connections																
2x M20x1.5							1									
2x ½ NPT							2									
Emergency action																
Emergency shutdown at 0 mA (no longer available)								0								
Emergency shutdown at a set point lower than 3.85 mA								1								
Explosion protection certificate																
As specified in Table 2											0					
NEPSI	Ex d IIC T6~T4; Ex de IIC T6~T4 (on request)	2	1								1					
IECEx	Ex d IIC T6, T5, T4 Gb; Ex d e IIC T6, T5, T4 Gb; Ex tb IIIC T80°C Db IP66	2	1								2					
EAC Ex	On request	2	1								3					
Special applications																
Without													0			
Version compatible with paint (IP 41/NEMA 1)													1			
Special version																
Without														0	0	0